THIS DOCUMENT WAS REDACTED WITH THE PRODUCTIP REDACTION TOOL ON 2018-05-22. AT THE TIME OF GENERATING THE DOCUMENT THE ORIGINAL DOCUMENT WAS AVAILABLE ALSO. THE ORIGINAL CAN ONLY BE MADE AVAILABLE BY THE DOCUMENT OWNER.

TEST REPORT

IEC 62133: 2012(2nd Edition)

Secondary cells and batteries containing alkaline or other non-acid electrolytes

Safety requirements for portable sealed secondary cells, and for batteries made from them, for use in portable applications

Report reference No. .....:	STR16079217S
Tested by (name+ signature) .....:	Sam Li
Compiled by (+ signature) .....:	Jenny Zeng
Approved by (+ signature) .....:	Ailis Ma
Date of issue .....:	Aug. 26, 2017
Total number of pages .....:	26 Pages.
Testing laboratory .....:	Shenzhen SEM.Test Technology Co., Ltd.
Address .....:	1/F, Building A, Hongwei Industrial Park, Liuxian 2nd Road, Bao'an District, Shenzhen, P.R.C (518101)
Testing location .....:	As above
Applicant's name .....:	
Address .....:	
Manufacturer's name .....:	
Address .....:	
Test specification .....:	
Standard .....:	IEC 62133: 2012(2nd Edition)
Test procedure .....:	Type approved
Procedure deviation .....:	N.A.
Non-standard test method .....:	N.A.

This test report is specially limited to the above client company and product model only, It may not be duplicated without prior written consent of SEM. Test.

Test item description .....:	Lithium-polymer battery
Trade Mark .....:	NIA
Model/type reference .....:	552025
Ratings .....:	3.7V, 0.74Wh (200mAh)

THIS DOCUMENT WAS REDACTED WITH THE PRODUCTIP REDACTION TOOL ON 2018-05-22. AT THE TIME OF GENERATING THE DOCUMENT THE ORIGINAL DOCUMENT WAS AVAILABLE ALSO. THE ORIGINAL CAN ONLY BE MADE AVAILABLE BY THE DOCUMENT OWNER.

Particulars: test item vs. test requirements

Classification of installation and use .....: Build-in and use in portable applications

Supply connection.....: Wires

Chemistry.....: ☒ Lithium systems ☐ nickel systems

Shape .....: ☐Prismatic ☒Pouch ☐Coin/button ☐Cylindrical

Polymer cell electrolyte type.....: ☐gel polymer ☐solid polymer ☒other

Possible test case verdicts:

- test case does not apply to the test object .....: N/A
- test object does meet the requirement .....: P(ass)
- test object does not meet the requirement .....: F(ail)

Testing:

Date of receipt of test item .....: July 25, 2017

Date(s) of performance of test .....: July 26, 2017 – Aug. 23, 2017

General remarks:

"(see remark #)" refers to a remark appended to the report,

"(see appended table)" refers to a table appended to the report,

Throughout this report a comma is used as the decimal separator,

The test results presented in this report relate only to the object tested,

This report shall not be reproduced except in full without the written approval of the testing laboratory,

Clause numbers between brackets refer to clauses in IEC 62133(Optional remark).

General product information:

The Lithium-polymer battery is constructed with one Lithium-polymer cell in 1S1P, and has overcharge, over-discharge, over current and short-circuits protection circuit.

The cells have been tested and evaluated according to their specified working conditions (as given below), which are provided by client;

Details information of the battery and the cell built in the battery, as following:

Product	Lithium-polymer Cell	Lithium-polymer battery
Model No.	552025	552025
Nominal voltage	3.7V	3.7V
Rated capacity	200mAh	200mAh
Max. Charging Current	200mA	200mA
Max. Charging voltage	4.2V	4.2V
End of discharge voltage	2.75V	2.75V
Charging temperature	10-45℃	10-45℃

THIS DOCUMENT WAS REDACTED WITH THE PRODUCTIP REDACTION TOOL ON 2018-05-22. AT THE TIME OF GENERATING THE DOCUMENT THE ORIGINAL DOCUMENT WAS AVAILABLE ALSO. THE ORIGINAL CAN ONLY BE MADE AVAILABLE BY THE DOCUMENT OWNER.

recommended by manufacturer		
First charging procedure (20℃±5℃)	Charge at constant current 80mA until voltage reaches 4.2V, and then charge at constant voltage 4.2V till charge current is 8mA.	Charge at constant current 80mA until voltage reaches 4.2V, and then charge at constant voltage 4.2V till charge current is 8mA.
Second charging procedure	Stored at 45℃ or 10℃ for 1h-4h, then charge at constant current 400mA until voltage reaches 4.25V, then charge at constant voltage 4.25V till charge current is 0.05C(30mA)	Stored at 45℃ or 10℃ for 1h-4h, then charge at constant current 400mA until voltage reaches 4.25V, then charge at constant voltage 4.25V till charge current is 0.05C(30mA)
Dimension	25.0*20.0*5.5mm	25.0*20.0*5.5mm
Weight	12.8g	13.5g

Tests Performed (name of test and test clause):

Tests are made with the number of samples specified in Table 2 of IEC 62133:2012(2nd Edition).

Test items:

Cl.6 type test conditions

Cl.8.1 Charging procedures for test purposes

Cl.8.2.1 Continuous charging at constant voltage (cells)

Cl.8.3.1 External short circuit(cell)

Cl.8.3.2 External short circuit(battery)

Cl.8.3.3 Free fall

Cl.8.3.4 Thermal abuse (cells)

Cl.8.3.5 Crush(cells)

Cl.8.3.6 Over-charging of battery

Cl.8.3.7 Forced discharge (cells)

Cl.8.3.8 Transport tests (Cells)

Testing Location:

Shenzhen SEM.Test Technology Co., Ltd.

1/F, Building A, Hongwei Industrial Park, Liuxian 2nd Road, Bao'an District, Shenzhen, P.R.C (518101)

Test conclusion:

The Lithium-polymer battery submitted by Shenzhen Blue Sky Zhongke Energy Technology Co., Ltd. are tested according to IEC 62133: 2012(2nd edition) Secondary cells and batteries containing alkaline or other non-acid electrolytes Safety requirements for portable sealed secondary cells, and for batteries made from them, for use in portable applications.

Test result: Pass.

THIS DOCUMENT WAS REDACTED WITH THE PRODUCTIP REDACTION TOOL ON 2018-05-22. AT THE TIME OF GENERATING THE DOCUMENT THE ORIGINAL DOCUMENT WAS AVAILABLE ALSO. THE ORIGINAL CAN ONLY BE MADE AVAILABLE BY THE DOCUMENT OWNER.

Copy of marking plate:

LTZK 552025 1|CP5/20/25
3.7V 200mAh 0.74Wh
Lithium-polymer battery
Red wire (+) Black wire (-)
June 2017

Circuit diagram:

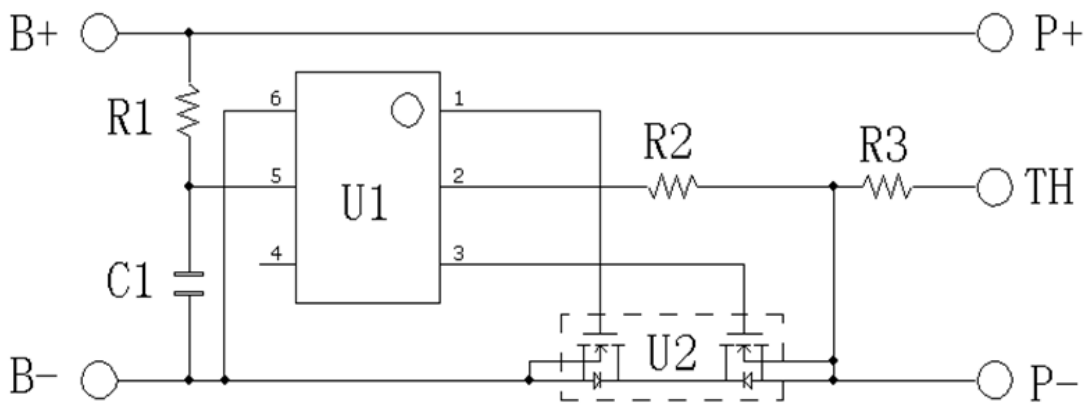

THIS DOCUMENT WAS REDACTED WITH THE PRODUCTIP REDACTION TOOL ON 2018-05-22. AT THE TIME OF GENERATING THE DOCUMENT THE ORIGINAL DOCUMENT WAS AVAILABLE ALSO. THE ORIGINAL CAN ONLY BE MADE AVAILABLE BY THE DOCUMENT OWNER.

	TABLE: Critical components information				P
Object/part No.	**Manufacturer/ trademark**	**Type/ model**	**Technical data**	**Standard**	**Mark(s) of conformity**
Lead wire (Red & Black)	Baolongda	1571	28AWG, 80°C, 30V	--	--
PCM	Shenzhen TYD Electric Co., Ltd.	36150	Overcharge detection voltage: 4.25±0.1V, Over-discharge detection voltage: 3.0±0.15V, Over-current detection current: ≤8A	--	--
-PCB	Interchangeable	36150	V-0, 130° C	--	--
Protect IC (U1)	Interchangeable	DW01	Overcharge detection voltage: 4.25±0.1V, Overdischarge detection voltage: 3.0±0.15V, Overcurrent detection voltage: 0.15±0.15V, Short protection voltage: 1.35±0.05V T_{opr}: -40~85° C	--	Tested with appliance
MOSFET (U2)	Interchangeable	DP8205	V_{DS}:20V,V_{GS}:±12V,I_D:6A, T_J:-55-150° C	--	Tested with appliance
Cell	Shenzhen Blue Sky Zhongke Energy Technology Co., Ltd.	552025	Rated Voltage: 3,7Vd.c., Rated Capacity: 200mAh	IEC 62133: 2012	Tested with appliance
-Electrolyte	Jiangxi Youli New Materials Co., Ltd.	YL14485	$LiPF_6$, EC,DEC,EMC	--	--
-Separator	Sinoma Science & Technology Co., Ltd.	0.016*31	12μm(Thickness)×31mm(Width)×1605mm(Length) Shutdown temperature:130° C	--	--
- Negative electrode	Lianhe Copper Foil (huizhou) Co., Ltd.	0.010mm(Thickness)×330mm(Width)×785mm(Length)	Graphite	--	--
-Positive electrode	Foshan High-tech Base Aluminum Co., Ltd.	0.016mm(Thickness)×330mm(Width)×800mm(Length)	$LiCoO_2$	--	--
-Positive electrode tab	Shenzhen T&S-Battery Co., Ltd.	0.1mm(Thickness)×3mm(Width)	Al, Ni	--	--
-Aluminum plastic film	SHOWA Corporation	Interchangeable	0.113mm(Thickness)×80mm(Width)×40mm(Length)	--	--

THIS DOCUMENT WAS REDACTED WITH THE PRODUCTIP REDACTION TOOL ON 2018-05-22. AT THE TIME OF GENERATING THE DOCUMENT THE ORIGINAL DOCUMENT WAS AVAILABLE ALSO. THE ORIGINAL CAN ONLY BE MADE AVAILABLE BY THE DOCUMENT OWNER.

IEC 62133: 2012			
Clause	**Requirement – Test**	**Result - Remark**	**Verdict**
4	**Parameter measurement tolerances**		P
	Parameter measurement tolerances		P
5	**General safety considerations**		P
	Cells and batteries subject to intended use be safe and continue to function in all respects	Refer to the following clauses.	P
	Cells and batteries subject to reasonably foreseeable misuse do not present significant hazards.	Refer to the following clauses.	P
5.2	Insulation and wiring		P
	–Insulation Resistance between an accessible metal case (excluding electrical contacts) and positive terminals ≥ 5MΩ.	No accessible metal case exists;	N/A
	Internal wiring and insulation are sufficient to withstand maximum anticipated current, voltage and temperature requirements	See tests of clause 8.	P
	Orientation of wiring maintains adequate creepage and clearance distances between conductors. Mechanical integrity of internal connections is sufficient to accommodate conditions of reasonably foreseeable misuse.	See tests of clause 8.	P
5.3	Venting		P
	Battery cases and cells incorporate a pressure relief mechanism or are constructed so that they relieve excessive internal pressure at a value and rate that will preclude rupture, explosion and self-ignition.		P
	Encapsulation used to support cells within an outer casing does not cause the battery to overheat during normal operation no inhibit pressure relief.	Without encapsulation.	N/A
5.4	Temperature/voltage/current management		P
	The batteries are designed such that abnormal temperature rise conditions are prevented.		P
	Means is provided to limit current to safe levels during charge and discharge.		P
	The batteries are designed such that within temperature, voltage and current limits specified by the cell manufacturer.		P
	Batteries are provided with specifications and charging instructions for equipment manufacturers so that associated chargers are designed to maintain charging within the temperature, voltage and current limits specified;	See battery specifications;	P

THIS DOCUMENT WAS REDACTED WITH THE PRODUCTIP REDACTION TOOL ON 2018-05-22. AT THE TIME OF GENERATING THE DOCUMENT THE ORIGINAL DOCUMENT WAS AVAILABLE ALSO. THE ORIGINAL CAN ONLY BE MADE AVAILABLE BY THE DOCUMENT OWNER.

IEC 62133: 2012			
Clause	**Requirement – Test**	**Result - Remark**	**Verdict**
5.5	Terminal contacts		P
	Terminals have a clear polarity marking on the external surface of the battery	"Red wire" for positive polarity and "Black wire" for negative polarity marking on the label near the terminal	P
	The size and shape of the terminal contacts ensure that they can carry the maximum anticipated current.		P
	External terminal contact surfaces are formed from conductive materials with good mechanical strength and corrosion resistance.		P
	Terminal contacts are arranged to minimize the risk of short circuits.		P
	the external connector prevents reverse polarity connections, Battery packs with keyed external connectors designed for connection to specific end products need not be marked with polarity marking;		N/A
5.6	Assembly of cells into batteries	One cell in battery	**N/A**
5.6.1	If there is more than one battery housed in a single battery case, cells used in the assembly of each battery have closely matched capacities, be of the same design, be of the same chemistry and be from the same manufacturer		N/A
	Each battery shall have an independent control and protection.	Considered in the end-device.	N/A
	Manufacturers of cells make recommendations about current, voltage and temperature limits so that the battery manufacturer/designer may ensure proper design and assembly		P
	Batteries that are designed for the selective discharge of a portion of their series connected cells incorporate separate circuitry to prevent the cell reversal caused by uneven discharges		N/A
	Protective circuit components are added as appropriate and consideration given to the end-device application		N/A
	When testing a battery, the manufacturer of the battery provides a test report confirming the compliance according to this standard		N/A
	The battery incorporates separate circuitry to prevent cell reversal from uneven charges as the pack is designed for the selective discharge of a portion of its series connected cells.		N/A
5.6.2	Design recommendation for lithium system only	The protections should be considered in the end-device.	N/A
	For the battery consisting of a single cell or a single cellblock:		N/A

THIS DOCUMENT WAS REDACTED WITH THE PRODUCTIP REDACTION TOOL ON 2018-05-22. AT THE TIME OF GENERATING THE DOCUMENT THE ORIGINAL DOCUMENT WAS AVAILABLE ALSO. THE ORIGINAL CAN ONLY BE MADE AVAILABLE BY THE DOCUMENT OWNER.

IEC 62133: 2012			
Clause	**Requirement – Test**	**Result - Remark**	**Verdict**
	- charging voltage of the cell does not exceed the upper limit of the charging voltage specified in Clause 8.1.2, Table 4 ; or		
	- Charging voltage of the cell does not exceed the different upper limit of the charging voltage determined through Clause 8.1.2, NOTE 1.		N/A
	For the battery consisting of series-connected plural single cells or series-connected plural cellblocks: - The voltages of any one of the single cells or single cellblocks does not exceed the upper limit of the charging voltage, specified in Clause 8.1.2, Table 4, by monitoring the voltage of every single cell or the single cellblocks; or		N/A
	- The voltages of any one of the single cells or single cellblocks does not exceed the different upper limit of the charging voltage, determined through Clause 8.1.2, NOTE 1, by monitoring the voltage of every single cell or the single cellblocks		N/A
	For the battery consisting of series-connected plural single cells or series-connected plural cellblocks: - Charging is stopped when the upper limit of the charging voltage, specified in Clause 8.1.2, Table 4, is exceeded for any one of the single cells or single cellblocks by measuring the voltage of every single cell or the single cellblocks; or		N/A
	- Charging is stopped when the upper limit of the different charging voltage, determined through Clause 8.1.2, NOTE 1, is exceeded for any one of the single cells or single cell or the single cellblocks		N/A
5.7	Quality plan		P
	The manufacture has prepared a quality plan defining the procedures for the inspection of materials, components, cells and batteries and which covers the process of producing each type of cell and battery.	The manufacturer has ISO 9001:2008 certificate and such quality plan.	P

6	**Type test conditions**		P
	Tests were conducted with the number of cells or batteries as outlined in Table 2 of IEC 62133 with cells or batteries that were not more than six months old.	Tests are made with the number of batteries specified in Table 2. battery are not more than six months old.	P
	Unless noted otherwise in the test methods, testing was conducted in an ambient of 20°C ± 5°C.	Tests are carried out at 20°C-25°C.	P

THIS DOCUMENT WAS REDACTED WITH THE PRODUCTIP REDACTION TOOL ON 2018-05-22. AT THE TIME OF GENERATING THE DOCUMENT THE ORIGINAL DOCUMENT WAS AVAILABLE ALSO. THE ORIGINAL CAN ONLY BE MADE AVAILABLE BY THE DOCUMENT OWNER.

IEC 62133: 2012			
Clause	**Requirement – Test**	**Result - Remark**	**Verdict**
7	**Specific requirements and tests(nickel systems)**		N/A
7.1	Charging procedure for test purpose		N/A
7.2	Intended use		N/A
7.2.1	Continuous Low-rate charging (cells)		N/A
	Result: No fire, No explosion	See below	N/A

Sample No.	Model	Recommended Charging Method, CC, CV, or CC/CV	Recommended Charging Voltage Vc, Vdc	Recommended Charging Current Irec, A	OCV at Start of Test, Vdc	Results

supplementary information:

- NF: No Fire
- NE: No Explosion
- NL: No Leakage
- Fire: the emission of flames from a cell or battery.
- Explosion: failure that occurs when a cell container or battery case opens violently and major components are forcibly expelled.
- Leakage: visible escape of liquid electrolyte.

7.2.2	Vibration		N/A
	Result: No fire, No explosion, No leakage	See below	N/A

Sample No.	Model	OCV at start of test, (Vdc)	Results

supplementary information:
- NF: No Fire
- NE: No Explosion
- NL: No Leakage
- Fire: the emission of flames from a cell or battery.
- Explosion: failure that occurs when a cell container or battery case opens violently and major components are forcibly expelled.
- Leakage: visible escape of liquid electrolyte.

THIS DOCUMENT WAS REDACTED WITH THE PRODUCTIP REDACTION TOOL ON 2018-05-22. AT THE TIME OF GENERATING THE DOCUMENT THE ORIGINAL DOCUMENT WAS AVAILABLE ALSO. THE ORIGINAL CAN ONLY BE MADE AVAILABLE BY THE DOCUMENT OWNER.

IEC 62133: 2012			
Clause	**Requirement – Test**	**Result - Remark**	**Verdict**
7.2.3	Moulded case stress at high ambient temperature		N/A
	Oven temperature(℃)……:		N/A
	Results: No physical distortion of the battery casing resulting in exposure if internal components		N/A
7.2.4	Temperature cycling		N/A
	Result: No fire, No explosion, No leakage		N/A
7.3	Reasonably foreseeable misuse		N/A
7.3.1	Incorrect installation cell		N/A
	The test was carried out using: - four fully charged cells of the same brand, type, size and age connected in series, with one of them reversed; or		N/A
	- A stabilized dc power supply.		N/A
	Result: No fire, No explosion……:		N/A

Sample No.	Model	OCV at reversed cell, (Vdc)	Results

supplementary information:
- NF: No Fire
- NE: No Explosion
- NL: No Leakage
- Fire: the emission of flames from a cell or battery.
- Explosion: failure that occurs when a cell container or battery case opens violently and major components are forcibly expelled.
- Leakage: visible escape of liquid electrolyte.

7.3.2	External short circuit		N/A
	The cells or batteries were tested until one of the following occurred: -24 hours elapsed; or		N/A
	- the case temperature declined by 20% of the maximum temperature rise		N/A
	Result: No fire, No explosion……:	See below	N/A

Sample No.	Ambient temperature (At 20°C ±	OCV at start of test (Vdc)	Max. External Temperature	Resistance of Circuit (mΩ)	Charging temp. Upper limit (°C)	Results	

THIS DOCUMENT WAS REDACTED WITH THE PRODUCTIP REDACTION TOOL ON 2018-05-22. AT THE TIME OF GENERATING THE DOCUMENT THE ORIGINAL DOCUMENT WAS AVAILABLE ALSO. THE ORIGINAL CAN ONLY BE MADE AVAILABLE BY THE DOCUMENT OWNER.

IEC 62133: 2012							
Clause	**Requirement – Test**			**Result - Remark**			**Verdict**
	5ºC or 55°C ± 5ºC)		(°C)				

supplementary information:
- NF: No Fire
- NE: No Explosion
- NL: No Leakage
- Fire: the emission of flames from a cell or battery.
- Explosion: failure that occurs when a cell container or battery case opens violently and major components are forcibly expelled.
- Leakage: visible escape of liquid electrolyte.

7.3.3	Free fall		N/A
	Result: No fire, No explosion.		N/A
7.3.4	Mechanical shock (crash hazard)		N/A
	Result: No fire, No explosion, No leakage.		N/A
7.3.5	Thermal abuse		N/A
	Oven temperature(℃)……:		N/A
	Result: No fire, No explosion		N/A
7.3.6	Crushing of cells		N/A
	The crushing force was released upon: - The maximum force of 13kN±1 kN has been applied; or		N/A
	- An abrupt voltage drop of one-third of the original voltage has been obtained		N/A
	The cell is prismatic type and a second set of samples was tested, rotated 90℃ around longitudinal axis compared to the first set		N/A
	Results: No fire, No Explosion……..:		N/A

Sample No.	Model	OCV at start of test (Vdc)	OCV at removal of crushing force, (Vdc)	Results

THIS DOCUMENT WAS REDACTED WITH THE PRODUCTIP REDACTION TOOL ON 2018-05-22. AT THE TIME OF GENERATING THE DOCUMENT THE ORIGINAL DOCUMENT WAS AVAILABLE ALSO. THE ORIGINAL CAN ONLY BE MADE AVAILABLE BY THE DOCUMENT OWNER.

IEC 62133: 2012			
Clause	**Requirement – Test**	**Result - Remark**	**Verdict**
supplementary information: - NF: No Fire - NE: No Explosion - NL: No Leakage - Fire: the emission of flames from a cell or battery. - Explosion: failure that occurs when a cell container or battery case opens violently and major components are forcibly expelled. - Leakage: visible escape of liquid electrolyte.			
7.3.7	Low pressure		N/A
	Chamber pressure (kPa)……..:		N/A
	Result: No fire, No explosion, No leakage.		N/A
7.3.8	Overcharge		N/A
	Results: No fire, No explosion……..:		N/A

Sample No.	Model	OCV Prior to charging, (Vdc)	Maximum charge current, (A)	Time for charging, (Hours)	Results

supplementary information:
- NF: No Fire
- NE: No Explosion
- NL: No Leakage
- Fire: the emission of flames from a cell or battery.
- Explosion: failure that occurs when a cell container or battery case opens violently and major components are forcibly expelled.
- Leakage: visible escape of liquid electrolyte.

7.3.9	Forced discharge		N/A
	Results: No fire, No explosion……..:		N/A

Sample no.	Model	OCV before application of reverse charge (Vdc)	Measured Reverse Charge It (A)	Total Time for Reversed Charge Application (Min)	Results

supplementary information:
- NF: No Fire
- NE: No Explosion
- NL: No Leakage
- Fire: the emission of flames from a cell or battery.
- Explosion: failure that occurs when a cell container or battery case opens violently and major components are forcibly expelled.

THIS DOCUMENT WAS REDACTED WITH THE PRODUCTIP REDACTION TOOL ON 2018-05-22. AT THE TIME OF GENERATING THE DOCUMENT THE ORIGINAL DOCUMENT WAS AVAILABLE ALSO. THE ORIGINAL CAN ONLY BE MADE AVAILABLE BY THE DOCUMENT OWNER.

IEC 62133: 2012			
Clause	**Requirement – Test**	**Result - Remark**	**Verdict**
- Leakage: visible escape of liquid electrolyte.			

8	**Specific requirements and tests**		**P**
8.1	Charging procedure for test purposes		P
8.1.1	First procedure		-
	Test is carried out at 20°C±5°C. Charging method declared by the manufacturer.		P
	Prior to charging, the battery shall have been discharged at 20 °C ± 5 °C at a constant current of 0,2 *It* A down to a specified final voltage.		P
8.1.2	Second procedure		-
	For clause 8.3.1, 8.3.2, 8.3.4, 8.3.5, and 8.3.9 charging procedure After stabilization for 1 to 4 hours respectively at ambient temperature of highest test temperature and lowest test temperature, as specified in Table 4		P
	cells are charged by using the upper limited charging voltage and maximum charging current, until the charging current is reduced to 0,05 *It* A, using a constant voltage charging method.		P
	- Upper limit charging voltage	4.25 V/cell	P
	- Maximum charging current Specified by the manufacturer of cells		P
	Charging temp. Upper limit	45℃	P
	Charging temp. Lower limit	-5℃	P

8.2	Intended use		P
8.2.1	Continuous charging at constant voltage (cells)		P
	Fully charged cells are subjected for 7 days to a charge as specified by the manufacturer.		P
	Results:: No fire, no explosion, no leakage	See below table;	P

Sample No.	Recommended Charging Method, CC, CV, or CC/CV	Recommended charging voltage V_c, (Vdc)	Recommended Charging Current Irec, A	OCV at Start of Test, Vdc	Results
C01	CC/CV	4.20	0.2	4.20	NF,NE,NL
C02	CC/CV	4.20	0.2	4.20	NF,NE,NL
C03	CC/CV	4.20	0.2	4.20	NF,NE,NL
C04	CC/CV	4.20	0.2	4.20	NF,NE,NL

THIS DOCUMENT WAS REDACTED WITH THE PRODUCTIP REDACTION TOOL ON 2018-05-22. AT THE TIME OF GENERATING THE DOCUMENT THE ORIGINAL DOCUMENT WAS AVAILABLE ALSO. THE ORIGINAL CAN ONLY BE MADE AVAILABLE BY THE DOCUMENT OWNER.

IEC 62133: 2012					
Clause	**Requirement – Test**		**Result - Remark**		**Verdict**
C05	CC/CV	4.20	0.2	4.20	NF,NE,NL

supplementary information:

- NF: No Fire
- NE: No Explosion
- NL: No Leakage
- Fire: the emission of flames from a cell or battery.
- Explosion: failure that occurs when a cell container or battery case opens violently and major components are forcibly expelled.
- Leakage: visible escape of liquid electrolyte.

8.2.2	Moulded case stress at high ambient temperature (battery)			N/A
	Fully charged batteries according to the first procedure in 8.1.1, the batteries were placed in an air-circulating oven at a temperature of 70ºC±2ºC for 7 hours. Afterwards, they are removed and allowed to return to room temperature.			N/A
	Results: no physical distortion of the battery casing resulting in exposure if internal components.			N/A
Sample No.				N/A
Status	No evidence of mechanical damage No physical distortion of the battery case resulting in exposure of internal components.			

8.3	Reasonably foreseeable misuse					P
8.3.1	External short circuit (cell)					P
	Fully charged each cell according to the second procedure in 8.1.2;					P
	Fully charged cells were subjected to a short circuit test at 20ºC±5ºC.					P
	The external resistance of 80±20 mΩ.					P
	The cells were tested for 24 h or until the case temperature declined by 20% of the maximum temperature rise.					P
	Results: no fire, no explosion.					P
	After the test			See below		P
Sample No.	Ambient temperature (At 20ºC±5ºC)	OCV at start of test (Vdc)	Max. External Temperature(°C)	Resistance of Circuit (mΩ)	Charging temp. Upper limit (°C)	Results
C06	22.4	4.23	118.6	81	45	NF,NE
C07	22.4	4.24	113.4	80	45	NF,NE

THIS DOCUMENT WAS REDACTED WITH THE PRODUCTIP REDACTION TOOL ON 2018-05-22. AT THE TIME OF GENERATING THE DOCUMENT THE ORIGINAL DOCUMENT WAS AVAILABLE ALSO. THE ORIGINAL CAN ONLY BE MADE AVAILABLE BY THE DOCUMENT OWNER.

IEC 62133: 2012						
Clause	**Requirement – Test**			**Result - Remark**		**Verdict**
C08	22.4	4.22	115.3	79	45	NF,NE
C09	22.4	4.24	114.0	83	45	NF,NE
C10	22.4	4.24	116.3	81	45	NF,NE
Sample No.	Ambient temperature (At 20°C ± 5ºC)	OCV at start of test (Vdc)	Max. External Temperature(°C)	Resistance of Circuit (mΩ)	Charging temp. Lower limit (°C)	Results
C11	22.4	4.11	116.6	81	10	NF,NE
C12	22.4	4.11	115.3	79	10	NF,NE
C13	22.4	4.12	113.7	80	10	NF,NE
C14	22.4	4.12	115.4	82	10	NF,NE
C15	22.4	4.13	116.2	83	10	NF,NE
supplementary information - NF: No Fire - NE: No Explosion - Fire: the emission of flames from a cell or battery. - Explosion: failure that occurs when a cell container or battery case opens violently and major components are forcibly expelled.						

8.3.2	External short circuit (battery)					P
	Each fully charged battery according to the second procedure in 8.1.2;					P
	Fully charged batteries were subjected to a short circuit test at 55°C ± 5°C.					P
	The external resistance of 80±20 mΩ.					P
	The cells were tested for 24 h or until the case temperature declined by 20% of the maximum temperature rise.					P
	In case of rapid decline in short circuit current, the battery pack remained on test for an additional one hour after the current reached a low end steady state condition					P
	Results: no fire, no explosion.					P
	After the test			See below		P
Sample No.	Ambient temperature (At 55°C ± 5ºC)	OCV at start of test (Vdc)	Max. External Temperature(°C)	Resistance of Circuit (mΩ)	Charging temp. Upper limit (°C)	Results
B01	55.2	4.22	55.5	81	45	NF,NE
B02	55.2	4.23	55.5	80	45	NF,NE
B03	55.2	4.23	55.6	79	45	NF,NE

THIS DOCUMENT WAS REDACTED WITH THE PRODUCTIP REDACTION TOOL ON 2018-05-22. AT THE TIME OF GENERATING THE DOCUMENT THE ORIGINAL DOCUMENT WAS AVAILABLE ALSO. THE ORIGINAL CAN ONLY BE MADE AVAILABLE BY THE DOCUMENT OWNER.

IEC 62133: 2012						
Clause	**Requirement – Test**			**Result - Remark**		**Verdict**
B04	55.2	4.22	55.7	83	45	NF,NE
B05	55.2	4.22	55.6	81	45	NF,NE
Sample No.	Ambient temperature (At 55°C ± 5ºC)	OCV at start of test (Vdc)	Max. External Temperature(°C)	Resistance of Circuit (mΩ)	Charging temp. Lower limit (°C)	Results
B06	55.1	4.09	55.6	81	10	NF,NE
B07	55.1	4.09	55.5	79	10	NF,NE
B08	55.1	4.08	56.0	80	10	NF,NE
B09	55.1	4.10	55.7	82	10	NF,NE
B10	55.1	4.10	55.8	83	10	NF,NE

supplementary information

- NF: No Fire
- NE: No Explosion
- Fire: the emission of flames from a cell or battery.
- Explosion: failure that occurs when a cell container or battery case opens violently and major components are forcibly expelled.

8.3.3	Free fall		P
	Ambient temperature of 20±5℃		P
	Fully charged cells or batteries were dropped 3 times from a height of 1.0 m onto a concrete floor.	Three times	P
	After the test, the cell or battery shall be put on rest for a minimum of one hour and then a visual inspection shall be performed.		P
	Results: no fire, no explosion		P

Sample No.	C16	C17	C18
Status	NF, NE	NF, NE	NF, NE
Sample No.	B11	B12	B13
Status	NF, NE	NF, NE	NF, NE

supplementary information:

- NF: No Fire
- NE: No Explosion
- Fire: the emission of flames from a cell or battery.
- Explosion: failure that occurs when a cell container or battery case opens violently and major components are forcibly expelled.

8.3.4	Thermal abuse (cells)		P
	Fully charged cells were placed in a gravity or circulating air-convention oven. The oven		P

THIS DOCUMENT WAS REDACTED WITH THE PRODUCTIP REDACTION TOOL ON 2018-05-22. AT THE TIME OF GENERATING THE DOCUMENT THE ORIGINAL DOCUMENT WAS AVAILABLE ALSO. THE ORIGINAL CAN ONLY BE MADE AVAILABLE BY THE DOCUMENT OWNER.

IEC 62133: 2012						
Clause	**Requirement – Test**		**Result - Remark**			**Verdict**
	temperature was raised at a rate of 5°C/min ± 2°C/min to a temperature of 130°C ± 2°C. The cell remained at that temperature for 10 minutes before the test was terminated.					
	- 30 minutes for large cell (gross mass of more than 500 g as defined in IEC 62281)					N/A
	Gross mass of cell(g)					P
	Results: no fire, no explosion					P
After the test (Charging temp. Upper limit 45°C)						
Sample No.	C19	C20	C21	C22	C23	
Status	NF, NE	NF, NE	NF, NE	NF, NE	NF, NE	
After the test (Charging temp. Lower limit 10°C)						
Sample No.	C24	C25	C26	C27	C28	
Status	NF, NE	NF, NE	NF, NE	NF, NE	NF, NE	
supplementary information: - NF: No Fire - NE: No Explosion - Fire: the emission of flames from a cell or battery. - Explosion: failure that occurs when a cell container or battery case opens violently and major components are forcibly expelled.						

8.3.5	Crush (cells)		P
	Each fully charged cell, charged according to the second procedure at the upper limit charging temperature in 8.1.2, is immediately transferred and crushed between two flat surfaces in an ambient temperature.		P
	Fully charged cells were crushed between two flat surfaces with a hydraulic ram exerting a force of 13 kN ± 1 kN.		P
	The crushing is performed in a manner that will cause the most adverse result.	See below	P
	- Once the maximum force has been applied,		P
	- or an abrupt voltage drop of one-third of the original voltage has been obtained,		N/A
	- or 10 % of deformation has occurred compared to the initial dimension, the force is released (whichever condition occurs first should be the indication that the force should be released).		N/A
	A cylindrical or prismatic cell was crushed with its longitudinal axis parallel to the flat surfaces of the crushing apparatus. Test only the wide side of prismatic cells.		P

THIS DOCUMENT WAS REDACTED WITH THE PRODUCTIP REDACTION TOOL ON 2018-05-22. AT THE TIME OF GENERATING THE DOCUMENT THE ORIGINAL DOCUMENT WAS AVAILABLE ALSO. THE ORIGINAL CAN ONLY BE MADE AVAILABLE BY THE DOCUMENT OWNER.

IEC 62133: 2012						
Clause	**Requirement – Test**			**Result - Remark**		**Verdict**
	Results: no fire, no explosion.					P
After the test (Charging temp. Upper limit 45°C)						
Sample No.	C29	C30	C31	C32	C33	
Status	NF, NE	NF, NE	NF, NE	NF, NE	NF, NE	
After the test (Charging temp. Lower limit 10°C)						
Sample No.	C34	C35	C36	C37	C38	
Status	NF, NE	NF, NE	NF, NE	NF, NE	NF, NE	
supplementary information: - NF: No Fire - NE: No Explosion - Fire: the emission of flames from a cell or battery. - Explosion: failure that occurs when a cell container or battery case opens violently and major components are forcibly expelled.						

8.3.6	Over-charging of battery			P
	Test was continued until the temperature of the outer casing: -Reached steady state conditions (less than 10℃ change in 30-minute period); or			P
	- Returned to ambient			P
	Constant charging current (A)			P
	Supply voltage (Vdc)		1.2A	P
	Results: No fire, No explosion;		5V	P
Sample No.	OCV before charging (Vdc)	Maximum outer casing temperature,(℃)	Results	P
B17	3.21	32.4	NF,NE	P
B18	3.19	32.6	NF,NE	P
B19	3.18	34.6	NF,NE	P
B20	3.18	32.7	NF,NE	P
B21	3.20	31.7	NF,NE	P
supplementary information: - NF: No Fire - NE: No Explosion - Fire: the emission of flames from a cell or battery. - Explosion: failure that occurs when a cell container or battery case opens violently and major components are forcibly expelled.				

8.3.7	Forced discharge (cells)		P

THIS DOCUMENT WAS REDACTED WITH THE PRODUCTIP REDACTION TOOL ON 2018-05-22. AT THE TIME OF GENERATING THE DOCUMENT THE ORIGINAL DOCUMENT WAS AVAILABLE ALSO. THE ORIGINAL CAN ONLY BE MADE AVAILABLE BY THE DOCUMENT OWNER.

IEC 62133: 2012			
Clause	**Requirement – Test**	**Result - Remark**	**Verdict**
	A discharged cell is subjected to a reverse charge at 1 It A for 90 min.		P
	Results: no fire, no explosion		P

Sample no.	OCV before application of reverse charge (Vdc)	Measured Reverse Charge It (A)	Time for reversed charge, (minutes)	Results
C39	3.06	0.2	90	NF,NE
C40	3.01	0.2	90	NF,NE
C41	3.04	0.2	90	NF,NE
C42	3.05	0.2	90	NF,NE
C43	3.02	0.2	90	NF,NE

supplementary information:

- NF: No Fire
- NE: No Explosion
- Fire: the emission of flames from a cell or battery.
- Explosion: failure that occurs when a cell container or battery case opens violently and major components are forcibly expelled.

8.3.8	Transport test		P
	Regulations concerning international transport of lithium ion batteries are based on the UN Recommendations on the Transport of Dangerous Goods. Testing requirements are defined in the UN Manual of Tests & Criteria.	T-1, T-2, T-3 and T-4 tested Complied. No leakage, no venting, no short-circuit, no rupture, no explosion and no fire. T-6 is identical to clause 8.3.5.	P

Sample no.	Ambient temperature (At 55ºC± 5ºC)	OCV before charging (Vdc)	Resistance of Circuit (mΩ)	Maximum outer casing temperature,(℃)	Results
C44	55.2	4.20	79	123.4	P
C45	55.2	4.20	82	120.6	P
C46	55.2	4.20	83	120.7	P
C47	55.2	4.20	80	118.1	P
C48	55.2	4.20	81	115.3	P
C49	55.2	4.20	83	122.3	P
C50	55.2	4.20	82	119.6	P
C51	55.2	4.20	81	120.6	P
C52	55.2	4.20	80	120.1	P
C53	55.2	4.20	79	124.6	P

THIS DOCUMENT WAS REDACTED WITH THE PRODUCTIP REDACTION TOOL ON 2018-05-22. AT THE TIME OF GENERATING THE DOCUMENT THE ORIGINAL DOCUMENT WAS AVAILABLE ALSO. THE ORIGINAL CAN ONLY BE MADE AVAILABLE BY THE DOCUMENT OWNER.

IEC 62133: 2012			
Clause	**Requirement – Test**	**Result - Remark**	**Verdict**
8.3.9	Design evaluation – Forced internal short circuit (cells)	Only applicable to France, Japan, Korea and Switzerland;	N/A
	1) Number of samples		N/A
	This test shall be carried out on five secondary (rechargeable) lithium-ion cells.		N/A
	2) Charging procedure		N/A
	i) Conditioning charge and discharge		N/A
	ii) Storage procedure		N/A
	iii) Ambient temperature		N/A
	iv) Charging procedure for forced internal short test		N/A
	3) Pressing the winding core with nickel particle		N/A
	No fire.		N/A

Sample No.	Model	Chamber ambient (℃)	OCV at start of test, (Vdc)	Particle location [1)]	Maximum applied pressure, (N)	Results

Supplementary information:
[1)] identify one of the following:
1: Nickel particle inserted between positive and negative (active material) coated area.
2: Nickel particle insterted between positive aluminium foil and negative active material coated area;

- NF: No Fire
- NE: No Explosion
- NL: No Leakage
- Fire: the emission of flames from a cell or battery.
- Explosion: failure that occurs when a cell container or battery case opens violently and major components are forcibly expelled.
- Leakage: visible escape of liquid electrolyte.

9	**Information for safety**		P

THIS DOCUMENT WAS REDACTED WITH THE PRODUCTIP REDACTION TOOL ON 2018-05-22. AT THE TIME OF GENERATING THE DOCUMENT THE ORIGINAL DOCUMENT WAS AVAILABLE ALSO. THE ORIGINAL CAN ONLY BE MADE AVAILABLE BY THE DOCUMENT OWNER.

IEC 62133: 2012			
Clause	**Requirement – Test**	**Result - Remark**	**Verdict**
	The manufacturer of secondary cells ensures that information is provided about current, voltage and temperature limits of their products.	Showed in cell specification.	P
	The manufacturer of batteries ensures that equipment manufacturers and, in the case of direct sales, end-users are provided with information to minimize and mitigate hazards.		P
	Systems analyses performed by device manufacturers to ensure that a particular battery design prevents hazards from occurring during use of a product		N/A
	As appropriate, information relating to hazard avoidance resulting from a system analysis is provided to the end user……..:		N/A

10	**Marking**		P
10.1	Cell marking		N/A
	Rechargeable Li or Li-ion		N/A
	Battery designation		N/A
	Polarity of terminal		N/A
	Date of manufacture		N/A
	Name or identification of the manufacturer or supplier		N/A
	Nominal voltage(V)		N/A
	Rated Capacity (mAh)		N/A
10.2	Battery marking	See below	P
	Rechargeable Li or Li-ion	Li-ion	P
	Battery designation	Lithium-polymer battery	P
	Polarity of terminal	On the battery	P
	Date of manufacture	See labeling	P
	Name or identification of the manufacturer or supplier		P
	Nominal voltage(V)	3.7V	P
	Rated Capacity (mAh)	200mAh	P
	Caution statement		P
10.3	Other information		P
	Disposal instructions are marked on the battery or supplied in the information packaged with the battery.	See Specification book	P
	Recommended charging instruction are marked	See Specification book	P

THIS DOCUMENT WAS REDACTED WITH THE PRODUCTIP REDACTION TOOL ON 2018-05-22. AT THE TIME OF GENERATING THE DOCUMENT THE ORIGINAL DOCUMENT WAS AVAILABLE ALSO. THE ORIGINAL CAN ONLY BE MADE AVAILABLE BY THE DOCUMENT OWNER.

IEC 62133: 2012			
Clause	**Requirement – Test**	**Result - Remark**	**Verdict**
	on the battery or supplied in the information packaged with the battery.		

11	**Packaging**		P
	Cells or batteries were provided with packaging that was adequate to avoid mechanical damage during transport, handling and stacking. The materials and pack design was chosen to prevent the development of unintentional electrical conduction, corrosion of the terminal and ingress of moisture.		P

Annex A	**Charging range of secondary lithium ion cells for safe use**		P
A.1	General		P
A.2	Safety of lithium-ion secondary battery		P
A.3	Consideration on charging voltage		P
A.3.1	General		P
A.3.2	Upper limit charging voltage		P
A.3.2.1	General		P
A.3.2.2	Explanation of safety viewpoint		N/A
A.3.2.3	Safety requirements, when different upper limit charging voltage is applied		N/A
A.4	Consideration of temperature and charging current		P
A.4.1	General		P
A.4.2	Recommended temperature range		P
A.4.2.1	General		P
A.4.2.2	Safety consideration when a different recommended temperature range is applied		N/A
A.4.3	High temperature range		N/A
A.4.3.1	General		N/A
A.4.3.2	Explanation of safety viewpoint		N/A
A.4.3.3	Safety considerations when specifying charging conditions in high temperature range		N/A
A.4.3.4	Safety consideration when specifying new upper limit in high temperature range		N/A
A.4.4	Low temperature range		N/A
A.4.4.1	General		N/A

THIS DOCUMENT WAS REDACTED WITH THE PRODUCTIP REDACTION TOOL ON 2018-05-22. AT THE TIME OF GENERATING THE DOCUMENT THE ORIGINAL DOCUMENT WAS AVAILABLE ALSO. THE ORIGINAL CAN ONLY BE MADE AVAILABLE BY THE DOCUMENT OWNER.

IEC 62133: 2012			
Clause	**Requirement – Test**	**Result - Remark**	**Verdict**
A.4.4.2	Explanation of safety viewpoint		N/A
A.4.4.3	Safety considerations, when specifying charging conditions in low temperature range		N/A
A.4.4.4	Safety considerations when specifying a new lower limit in the low temperature range		N/A
A.4.5	Scope of the application of charging current		P
A.5	Sample preparation		N/A
A.5.1	General		N/A
A.5.2	Insertion procedure for nickel particle to generate internal short		N/A
	The insertion procedure carried out at 20℃±5℃ and under -25℃ of dew point		N/A
A.5.3	Disassembly of charged cell		N/A
A.5.4	Shape of nickel particle		N/A
A.5.5	Insertion of nickel particle to cylindrical cell		N/A
A.5.5.1	Insertion of nickel particle to winding core		N/A
A.5.5.2	Mark the position of nickel particle on the both end of winding core of the separator		N/A
A.5.6	Insertion of nickel particle to prismatic cell		N/A

THIS DOCUMENT WAS REDACTED WITH THE PRODUCTIP REDACTION TOOL ON 2018-05-22. AT THE TIME OF GENERATING THE DOCUMENT THE ORIGINAL DOCUMENT WAS AVAILABLE ALSO. THE ORIGINAL CAN ONLY BE MADE AVAILABLE BY THE DOCUMENT OWNER.

Photos

Model: 702535

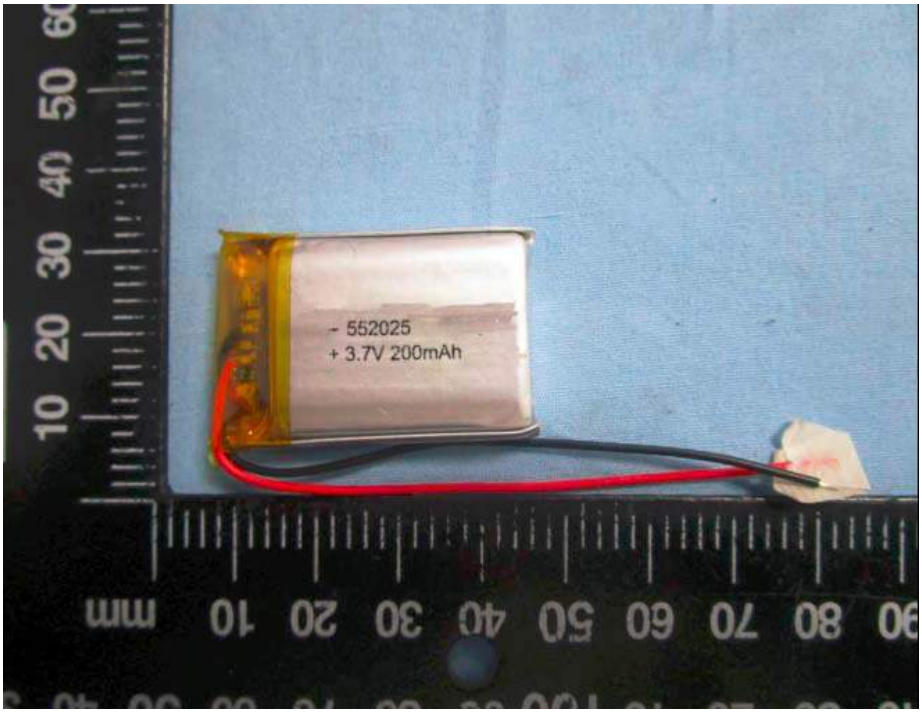

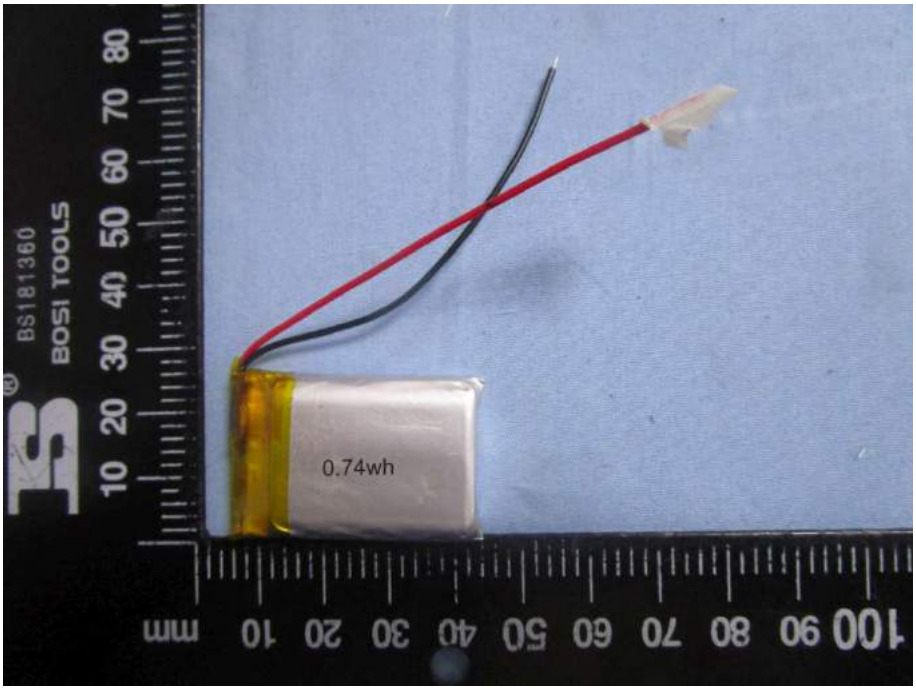

THIS DOCUMENT WAS REDACTED WITH THE PRODUCTIP REDACTION TOOL ON 2018-05-22. AT THE TIME OF GENERATING THE DOCUMENT THE ORIGINAL DOCUMENT WAS AVAILABLE ALSO. THE ORIGINAL CAN ONLY BE MADE AVAILABLE BY THE DOCUMENT OWNER.

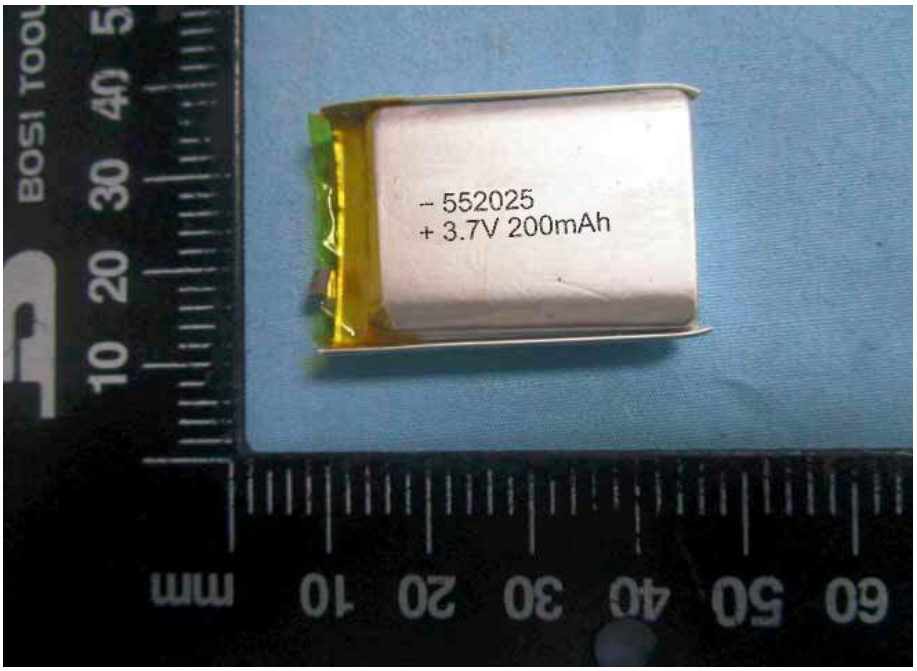

THIS DOCUMENT WAS REDACTED WITH THE PRODUCTIP REDACTION TOOL ON 2018-05-22. AT THE TIME OF GENERATING THE DOCUMENT THE ORIGINAL DOCUMENT WAS AVAILABLE ALSO. THE ORIGINAL CAN ONLY BE MADE AVAILABLE BY THE DOCUMENT OWNER.

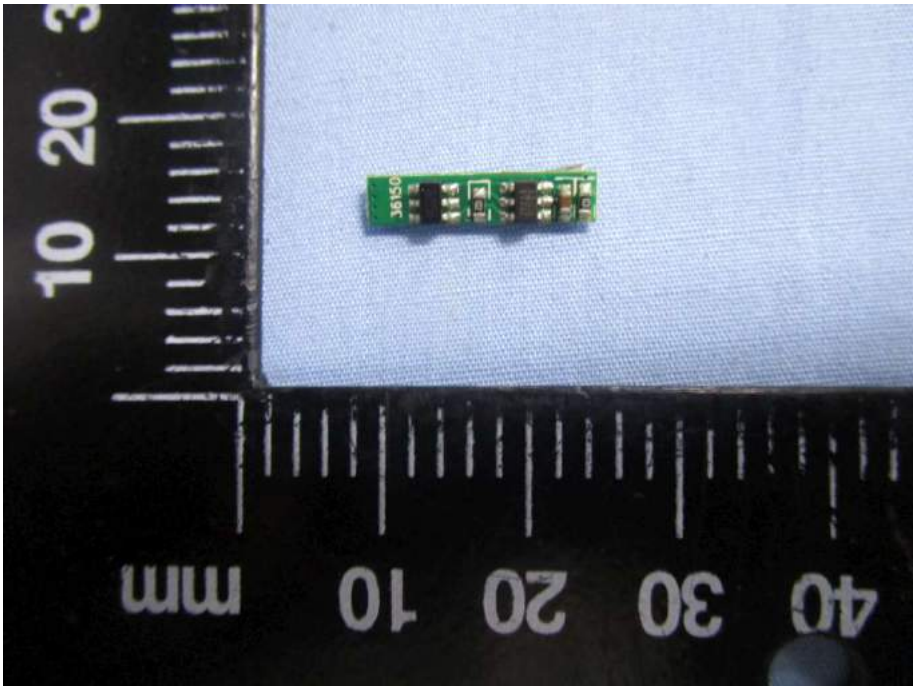

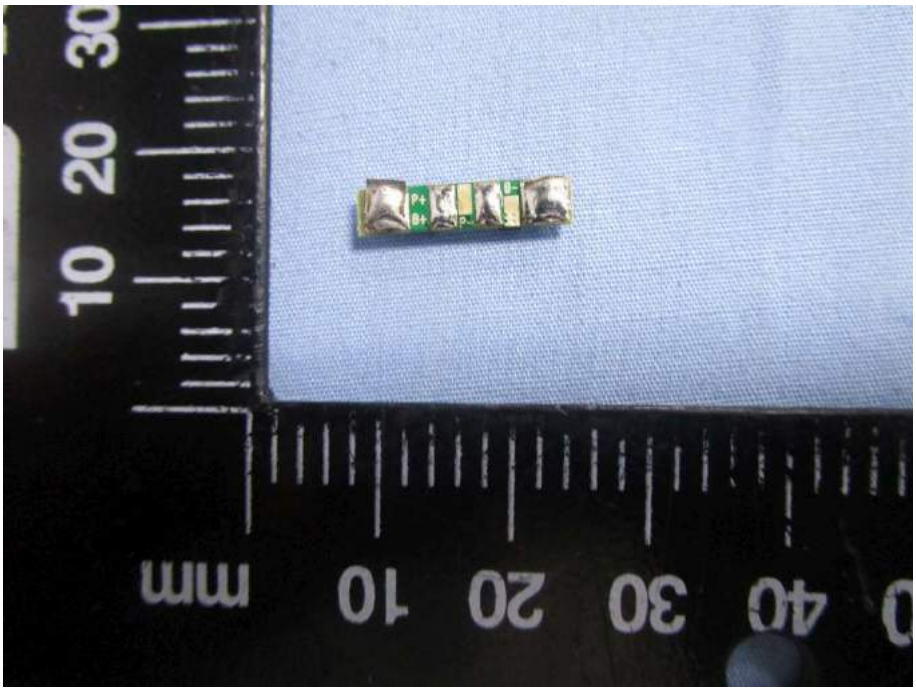

***** End of Test Report *****