THIS DOCUMENT WAS REDACTED WITH THE PRODUCTIP REDACTION TOOL ON 2018-08-13. AT THE TIME OF GENERATING THE DOCUMENT THE ORIGINAL DOCUMENT WAS AVAILABLE ALSO. THE ORIGINAL CAN ONLY BE MADE AVAILABLE BY THE DOCUMENT OWNER.

EMC TEST REPORT

Certificate No.	:	TB180719447
Applicant	:	
Equipment Under Test (EUT)		
EUT Name	:	Wireless charger Bluetooth speaker
Model No.	:	SL193
Series Model No.	:	SL207, SL208, SL209, 2995, P328.091 , 128060, 128061, 128062, 128063, LT95092
Brand Name	:	N/A
Receipt Date	:	2018-07-04
Test Date	:	2018-07-05 to 2018-07-19
Issue Date	:	2018-07-20
Standards	:	Draft ETSI EN 301 489-1 V2.2.0: 2017 Final draft EN 301 489-3 V2.1.1: 2017 Draft ETSI EN 301 489-17 V3.2.0: 2017
Conclusions	:	**PASS** In the configuration tested, the EUT complied with the standards specified above. The EUT technically complies with the Council Directive 2014/53/EU relating to radio equipment.
Test/Witness Engineer	:	Jason Xu
Engineer Supervisor	:	Ivan Su
Engineer Manager	:	Ray Lai

This report details the results of the testing carried out on one sample. The results contained in this test report do not relate to other samples of the same product. The manufacturer should ensure that all products in series production are in conformity with the product sample detailed in the report.

1 A/F., Bldg.6, Yusheng Industrial Zone, The National Road No.107 Xixiang Section 467, Xixiang, Bao'an, Shenzhen, Guangdong, China
Tel: +86 75526509301 Fax: +86 75526509195

THIS DOCUMENT WAS REDACTED WITH THE PRODUCTIP REDACTION TOOL ON 2018-08-13. AT THE TIME OF GENERATING THE DOCUMENT THE ORIGINAL DOCUMENT WAS AVAILABLE ALSO. THE ORIGINAL CAN ONLY BE MADE AVAILABLE BY THE DOCUMENT OWNER.

TABLE OF CONTENTS

THIS DOCUMENT WAS REDACTED WITH THE PRODUCTIP REDACTION TOOL ON 2018-08-13. AT THE TIME OF GENERATING THE DOCUMENT THE ORIGINAL DOCUMENT WAS AVAILABLE ALSO. THE ORIGINAL CAN ONLY BE MADE AVAILABLE BY THE DOCUMENT OWNER.

Revision History

Report No.	Version	Description	Issued Date
TB-EMC161067	Rev.01	Initial issue of report	2018-07-20

THIS DOCUMENT WAS REDACTED WITH THE PRODUCTIP REDACTION TOOL ON 2018-08-13. AT THE TIME OF GENERATING THE DOCUMENT THE ORIGINAL DOCUMENT WAS AVAILABLE ALSO. THE ORIGINAL CAN ONLY BE MADE AVAILABLE BY THE DOCUMENT OWNER.

THIS DOCUMENT WAS REDACTED WITH THE PRODUCTIP REDACTION TOOL ON 2018-08-13. AT THE TIME OF GENERATING THE DOCUMENT THE ORIGINAL DOCUMENT WAS AVAILABLE ALSO. THE ORIGINAL CAN ONLY BE MADE AVAILABLE BY THE DOCUMENT OWNER.

1. General Information

1.1 Client Information

Applicant	:	
Address	:	
Manufacturer	:	
Address	:	

1.2 General Description of EUT (EquipmentUnder Test)

EUT Name	:	Wireless charger Bluetooth speaker	
Model No.	:	SL193, SL207, SL208, SL209, 2995, P328.091 , 128060, 128061, 128062, 128063, LT95092	
Model Difference	:	All these models are identical in the same PCB layout and electrical circuit, the only difference is appearance.	
Product Description	:	Radio Parts Supported	Bluetooth 4.2: 2402MHz~2480MHz WPT: 110KHz~205KHz
		Modulation Type:	Bluetooth 4.2: GFSK
Power Rating	:	DC 3.7V 400mAh by Li-ion Battery. Input: DC 5V by USB Cable. Wireless Output: DC 5V/0.8A	
Software Version	:	1.0	
Hardware Version	:	1.0	
Connecting I/OPort(S)	:	Please refer to the User's Manual	

Note:

(1) For a more detailed features description, please refer to the manufacturer's specifications or the User's Manual.

(2) More information about the RF function, please refer the RF test reports.

1.3 Block Diagram Showing the Configuration of System Tested

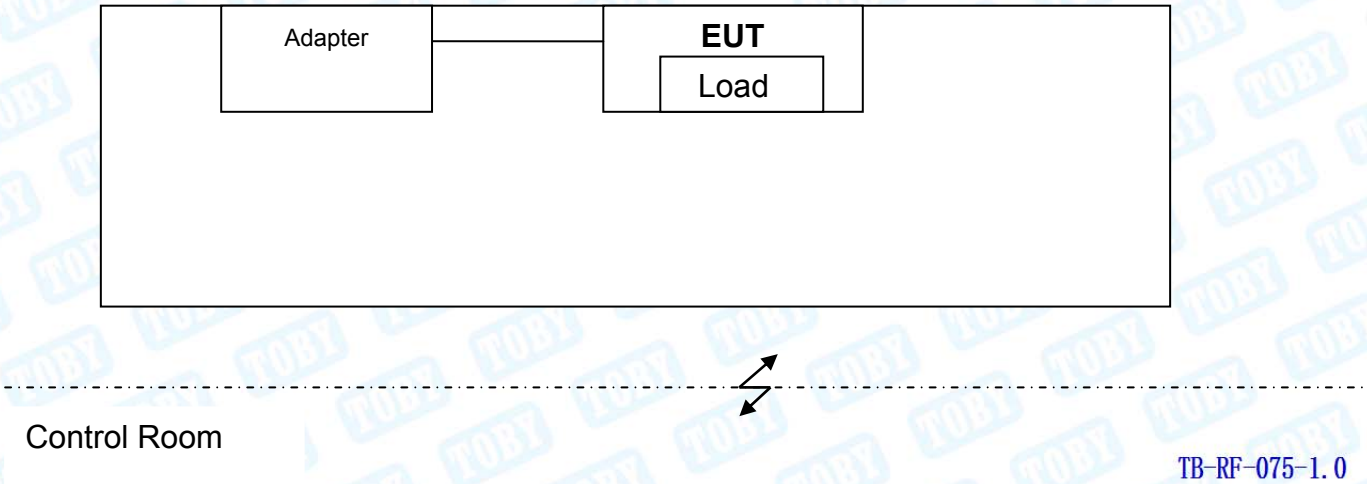

THIS DOCUMENT WAS REDACTED WITH THE PRODUCTIP REDACTION TOOL ON 2018-08-13. AT THE TIME OF GENERATING THE DOCUMENT THE ORIGINAL DOCUMENT WAS AVAILABLE ALSO. THE ORIGINAL CAN ONLY BE MADE AVAILABLE BY THE DOCUMENT OWNER.

1.4 Description of Support Units

Equipment Information				
Name	**Model**	**FCC ID/VOC**	**Manufacturer**	**Used "√"**
AC/DC Adapter	TEKA012	VOC	TEKA	√
Load	5V/9V	----	CHIPSVISION	√

1.5 Description of Operating Mode

To investigate the maximum EMI emission characteristics generated from EUT, the test system was pre-scanning tested based on the consideration of following EUT operation mode or test configuration mode which possible have effect on EMI emission level. Each of these EUT operation mode(s) or test configuration mode(s) mentioned above was evaluated respectively.

Pretest Mode	Description
Mode 1	USB Charging+BT Mode+Wireless Charing

The EUT system operated these modes were found to be the worst case during the pre-scanning test as Following:

For EMI Test	
Final Test Mode	**Description**
Mode 1	USB Charging+BT Mode+Wireless Charing
For EMS Test	
Final Test Mode	**Description**
Mode 1	USB Charging+BT Mode+ Wireless Charing

THIS DOCUMENT WAS REDACTED WITH THE PRODUCTIP REDACTION TOOL ON 2018-08-13. AT THE TIME OF GENERATING THE DOCUMENT THE ORIGINAL DOCUMENT WAS AVAILABLE ALSO. THE ORIGINAL CAN ONLY BE MADE AVAILABLE BY THE DOCUMENT OWNER.

1.6 Test Conditions

For the purpose of the present document, the test conditions of EN 301 489-1[1], clause 4, shall apply as appropriate. Further product related test conditions for digital cellular mobile and portable radio equipment are specified in the present document.

(1) General

For emission and immunity tests the test modulation, test arrangements, etc., as specified in the present document, clauses 4.1 to 4.5, shall apply.

Whenever the Equipment Under Test (EUT) is provided with a detachable antenna, the EUT shall be tested with the antenna fitted in a manner typical of normal intended use, unless specified otherwise.

(2) Arrangements for test signals

The provisions of EN 301 489-1, clause 4.2 shall apply.

a. Arrangements for establishing a communications link

The nominal frequency of the wanted RF input signal (for the receivers) shall be selected by setting the Absolute Radio Frequency Channel Number (ARFCN) to an appropriate number(e.g. in case of GSM 900 MHz this is 60 to 65, and in case of GSM 1 800 MHz this is 690 to 706).

A communication link shall be set up with a suitable base station simulator.

When the EUT is required to be in the transmit/receive mode, the following conditions shall be met:

- the EUT shall be commanded to operate at maximum transmit power;
- the downlink RXQUAL shall be monitored.

b. Arrangements for test signals at the input of transmitters

The provisions of EN 301 489-1, clause 4.2.1shall apply with the following modifications.

The test system shall command the EUT to disable Discontinuous Transmission (DTX).

A communication link shall be set up between the EUT and the test system.

c. Arrangements for test signals at the output of transmitters

The provisions of EN 301 489-1, clause 4.2.2 shall apply with the following modifications.

Where the equipment incorporates an external 50Ω RF antenna connector that is normally connected via a coaxial cable, then the wanted signal to establish a communication link shall be delivered from that connector by a coaxial cable.

Where the equipment incorporates an external 50Ω RF antenna connector, but this port is not normally connected via a coaxial cable, and where the equipment does not incorporate an external 50Ω RF connector (integral antenna equipment), then the wanted signal, to establish a communication link, shall be delivered from the equipment to an antenna located within the test environment.

d. Arrangements for test signals at the input of receivers

The provisions of EN 301 489-1, clause 4.2.3 shall apply with the following modifications.

Where the equipment incorporates an external 50Ω RF antenna connector that is normally connected via a coaxial cable, then the wanted signal to establish a communication link shall be delivered to that connector by a coaxial cable.

Where the equipment incorporates an external 50Ω RF antenna connector, but this port is not normally connected via a coaxial cable, and where the equipment does not incorporate an external 50Ω RF connector (integral antenna equipment), then the wanted signal, to establish a communication link, shall be presented to the equipment from an antenna located within the test environment.

The wanted RF input signal level shall be set to 40 dB above the reference sensitivity level.

e. Arrangements for test signals at the output of receivers

The provisions of EN 301 489-1, clause 4.2.4 shall apply.

f. Idle mode

When the EUT is required to be in the idle mode, the test system shall simulate a Base Station(BS) with Broadcast Control Channel/Common Control Channel (BCCH/CCCH) on one carrier. The EUT shall be synchronized to the BCCH, listening to the CCCH and able to respond to paging messages. Periodic Location Updating shall be disabled.

THIS DOCUMENT WAS REDACTED WITH THE PRODUCTIP REDACTION TOOL ON 2018-08-13. AT THE TIME OF GENERATING THE DOCUMENT THE ORIGINAL DOCUMENT WAS AVAILABLE ALSO. THE ORIGINAL CAN ONLY BE MADE AVAILABLE BY THE DOCUMENT OWNER.

THIS DOCUMENT WAS REDACTED WITH THE PRODUCTIP REDACTION TOOL ON 2018-08-13. AT THE TIME OF GENERATING THE DOCUMENT THE ORIGINAL DOCUMENT WAS AVAILABLE ALSO. THE ORIGINAL CAN ONLY BE MADE AVAILABLE BY THE DOCUMENT OWNER.

1.7 Performance Criterion

(1) Draft ETSI EN 301 489-17

Performance Criteria

According to **ETSI EN 301 489-17** standard, the general performance criteria as following:

Criterion	During Test	After test
A	Shall operate as intended. (see note 1). Shall be no loss of function. Shall be no unintentional transmissions.	Shall operate as intended. Shall be no degradation of performance (see note 3). Shall be no loss of function. Shall be no loss of stored data or user programmable functions.
B	May show loss of function (one or more). May show degradation of performance(see note 2). Shall be no unintentional transmissions.	Functions shall be self-recoverable. Shall operate as intended after recovering. Shall be no degradation of performance (see note 3). Shall be no loss of stored data or user programmable functions.
C	May be loss of function (one or more).	Functions shall be recoverable by the operator. Shall operate as intended after recovering. Shall be no degradation of performance (see note 3).

NOTE 1: Operate as intended during the test allows a level of degradation not below a minimum performance level specified by the manufacturer for the use of the apparatus as intended. In some cases the specified minimum performance level may be replaced by a permissible degradation of performance.If the minimum performance level or the permissible performance degradation is not specified by the manufacturer then either of these may be derived from the product description and documentation(including leaflets and advertising) and what the user may reasonably expect from the apparatus if used as intended.

NOTE 2: Degradation of performance during the test is understood as a degradation to a level not below a minimum performance level specified by the manufacturer for the use of the apparatus as intended. In some cases the specified minimum performance level may be replaced by a permissible degradation of performance.If the minimum performance level or the permissible performance degradation is not specified by the manufacturer then either of these may be derived from the product description and documentation(including leaflets and advertising) and what the user may reasonably expect from the apparatus if used as intended.

NOTE 3: No degradation of performance after the test is understood as no degradation below a minimum performance level specified by the manufacturer for the use of the apparatus as intended. In some cases the specified minimum performance level may be replaced by a permissible degradation of performance. After the test no change of actual operating data or user retrievable data is allowed.If the minimum performance level or the permissible performance degradation is not specified by the manufacturer then either of these may be derived from the product description and documentation(including leaflets and advertising) and what the user may reasonably expect from the apparatus if used as intended.

THIS DOCUMENT WAS REDACTED WITH THE PRODUCTIP REDACTION TOOL ON 2018-08-13. AT THE TIME OF GENERATING THE DOCUMENT THE ORIGINAL DOCUMENT WAS AVAILABLE ALSO. THE ORIGINAL CAN ONLY BE MADE AVAILABLE BY THE DOCUMENT OWNER.

Performance Table

Phenomena		Performance Criteria
Continuous phenomena applied to Transmitters (CT)	Tests shall be repeated with the EUT in standby mode (if applicable) to ensure that unintentional transmission does not occur. In systems using acknowledgement signals, it is recognized that an AC Knowledgement (ACK) or Not ACKnowledgement (NACK) transmission may occur, and steps should be taken to ensure that any transmission resulting from the application of the test is correctly interpreted.	A
Transient phenomena applied toTransmitters (TT)	Tests shall be repeated with the EUT in standby mode (if applicable) to ensure that unintentional transmission does not occur. In systems using acknowledgement signals, it is recognized that an acknowledgement (ACK) or not-acknowledgement (NACK) transmission may occur, and steps should be taken to ensure that any transmission resulting from the application of the test is correctly interpreted.	B (except for voltage dips of 100 ms and voltage interruptions of 5 000 ms duration, for which performance criteria C shall apply.)
Continuous phenomena applied toReceivers (CR)	Where the EUT is a transceiver, under no circumstances, shall the transmitter operate unintentionally during the test. In systems using acknowledgement signals, it is recognized that an ACK or NACK transmission may occur, and steps should be taken to ensure that any transmission resulting from the application of the test is correctly interpreted.	A
Transient phenomena applied toReceivers (TR)	Where the EUT is a transceiver, under no circumstances, shall the transmitter operate unintentionally during the test. In systems using acknowledgement signals, it is recognized that an ACK or NACK transmission may occur, and steps should be taken to ensure that any transmission resulting from the application of the test is correctly interpreted.	B (except for voltage dips of 100 ms and voltage interruptions of 5 000 ms duration for which performance criteria C shall apply.)

THIS DOCUMENT WAS REDACTED WITH THE PRODUCTIP REDACTION TOOL ON 2018-08-13. AT THE TIME OF GENERATING THE DOCUMENT THE ORIGINAL DOCUMENT WAS AVAILABLE ALSO. THE ORIGINAL CAN ONLY BE MADE AVAILABLE BY THE DOCUMENT OWNER.

(2) Final draft EN 301 489-3

According to **Final draft EN 301 489-3** standard, the general performance criteria as following:

• performance criterion A applies for immunity tests with phenomena of a continuous nature;
• performance criterion B applies for immunity tests with phenomena of a transient nature.

NOTE: Whether a phenomenon is considered transient, continuous or otherwise is indicated in the test procedures for the phenomenon in ETSI EN 301 489-1 [1], clause 9.

Performance Requirements

Criterion	During test	After test
A	Operate as intended No loss of function No unintentional responses	Operate as intended No loss of function No degradation of performance No loss of stored data or user programmable functions
B	May show loss of function No unintentional responses	Operate as intended Lost function(s) shall be self-recoverable No degradation of performance No loss of stored data or user programmable functions

The Requirement of Performance Criteria

1	Performance criteria for continuous phenomena applied to transmitters (CT)	Criterion A of the applicable class shall apply
2	Performance criteria for transient phenomena applied to transmitters (TT)	Criterion B of the applicable class shall apply
3	Performance criteria for continuous phenomena applied to receivers (CR)	Criterion A of the applicable class shall apply
4	Performance criteria for transient phenomena applied to transmitters (TR)	Criterion B of the applicable class shall apply

THIS DOCUMENT WAS REDACTED WITH THE PRODUCTIP REDACTION TOOL ON 2018-08-13. AT THE TIME OF GENERATING THE DOCUMENT THE ORIGINAL DOCUMENT WAS AVAILABLE ALSO. THE ORIGINAL CAN ONLY BE MADE AVAILABLE BY THE DOCUMENT OWNER.

1.8 Measurement Uncertainty

The reported uncertainty of measurement y ± U，where expended uncertainty U is based on a standard uncertainty multiplied by a coverage factor of k=2，providing a level of confidence of approximately 95 %.

Test	Parameters	Expanded Uncertainty (U_{Lab})	Expanded Uncertainty (U_{Cispr})
Conducted Emission	Level Accuracy: 9kHz~150kHz 150kHz to 30MHz	±3.42 dB ±3.42 dB	±4.0 dB ±3.6 dB
Electromagnetic Radiated Emission(3-loop)	Level Accuracy: 9kHz to 30 MHz	±3.60 dB	N/A
Radiated Emission	Level Accuracy: 9kHz to 30 MHz	±4.60 dB	N/A
Radiated Emission	Level Accuracy: 30MHz to 1000 MHz	±4.40 dB	±5.2 dB
Radiated Emission	Level Accuracy: Above 1000MHz	±4.20 dB	N/A
Mains Harmonic	Voltage	±3.11%	N/A
Voltage Fluctuations & Flicker	Voltage	±3.25%	N/A

1.9 Test Facility

The testing report were performed by the Shenzhen Toby Technology Co., Ltd., in their facilities located at 1A/F., Bldg.6, Yusheng Industrial Zone, The National Road No.107 Xixiang Section 467, Xixiang, Bao'an, Shenzhen, Guangdong, China. At the time of testing, the following bodies accredited the Laboratory:

CNAS (L5813)
The Laboratory has been accredited by CNAS to ISO/IEC 17025: 2005 General Requirements for the Competence of Testing and Calibration Laboratories for the competence in the field of testing. And the Registration No.: CNAS L5813.

A2LA Certificate No.: 4750.01
The laboratory has been accredited by American Association for Laboratory Accreditation(A2LA) to ISO/IEC 17025：2005 General Requirements for the Competence of Testing and Calibration Laboratories for the technical competence in the field of Electrical Testing. And the A2LA Certificate No.: 4750.01.

IC Registration No.: (11950A-1)
The Laboratory has been registered by Certification and Engineering Bureau of Industry Canada for radio equipment testing. The site registration: Site# 11950A-1.

THIS DOCUMENT WAS REDACTED WITH THE PRODUCTIP REDACTION TOOL ON 2018-08-13. AT THE TIME OF GENERATING THE DOCUMENT THE ORIGINAL DOCUMENT WAS AVAILABLE ALSO. THE ORIGINAL CAN ONLY BE MADE AVAILABLE BY THE DOCUMENT OWNER.

2 Test Results Summary

Test procedures according to the technical standards:

Requirement Standard:	Draft ETSI EN 301 489-1 V2.2.0: 2017 Final draft EN 301 489-3 V2.1.1: 2017 Draft ETSI EN 301 489-17 V3.2.0: 2017			
EMC Emission				
Test Standard	**Test Item**	**Limit**	**Judgment**	**Remark**
EN 55032:2015	Conducted Emission	Class B	PASS	
	Radiated Emission	Class B	PASS	
EN61000-3-2:2014	Harmonic Current Emission	Class A or D NOTE(2)	N/A	
EN 6000-3-3:2013	Voltage Fluctuations& Flicker		N/A	
EMC Immunity				
Test Standard	**Test Item**	**Performance Criteria**	**Judgment**	**Remark**
EN61000-4-2: 2009	Electrostatic Discharge	B	PASS	
EN 61000-4-3:2006 +A1:2008+A2:2010	RF electromagnetic field	A	PASS	
EN 61000-4-4:2012	Fast transients	B	PASS	
EN 61000-4-5:2014	Surges	B	PASS	
EN 61000-4-6: 2014	Injected Current	A	PASS	
EN 61000-4-11: 2004	Volt. Interruptions Volt. Dips	B /B/ C / C NOTE (3)	PASS	

NOTE:

(1)" N/A" denotes test is not applicable in this Test Report

(2) The power consumption of EUT is less than 75W and no Limits apply.

(3)Voltage dip: 0% residual0.5 cycle– Performance Criteria B

Voltage dip: 0% residual 1 cycle– Performance Criteria B

Voltage dip: 70% residual 25 cycles – Performance Criteria C

Voltage Interruption: 0% residual votage 250 cycles – Performance Criteria C

THIS DOCUMENT WAS REDACTED WITH THE PRODUCTIP REDACTION TOOL ON 2018-08-13. AT THE TIME OF GENERATING THE DOCUMENT THE ORIGINAL DOCUMENT WAS AVAILABLE ALSO. THE ORIGINAL CAN ONLY BE MADE AVAILABLE BY THE DOCUMENT OWNER.

3 Test Equipment Used

Conducted Emission Test					
Equipment	**Manufacturer**	**Model No.**	**Serial No.**	**Last Cal.**	**Cal. Due Date**
EMI Test Receiver	Rohde & Schwarz	ESCI	100321	Jul. 18, 2018	Jul. 17, 2019
RF Switching Unit	Compliance Direction Systems Inc	RSU-A4	34403	Jul. 18, 2018	Jul. 17, 2019
AMN	SCHWARZBECK	NNBL 8226-2	8226-2/164	Jul. 18, 2018	Jul. 17, 2019
LISN	Rohde & Schwarz	ENV216	101131	Jul. 18, 2018	Jul. 17, 2019
Radiation Emission Test					
Equipment	**Manufacturer**	**Model No.**	**Serial No.**	**Last Cal.**	**Cal. Due Date**
Spectrum Analyzer	Agilent	E4407B	MY45106456	Jul. 18, 2018	Jul. 17, 2019
EMI Test Receiver	Rohde & Schwarz	ESCI	101165	Jul. 18, 2018	Jul. 17, 2019
Bilog Antenna	ETS-LINDGREN	3142E	00117537	Mar.16, 2018	Mar. 15, 2019
Bilog Antenna	ETS-LINDGREN	3142E	00117542	Mar.16, 2018	Mar. 15, 2019
Horn Antenna	ETS-LINDGREN	3117	00143207	Mar.16, 2018	Mar. 15, 2019
Horn Antenna	ETS-LINDGREN	3117	00143209	Mar.16, 2018	Mar. 15, 2019
Pre-amplifier	HP	11909A	185903	Mar.17, 2018	Mar. 16, 2019
Pre-amplifier	HP	8449B	3008A00849	Mar.17, 2018	Mar. 16, 2019
Cable	HUBER+SUHNER	100	SUCOFLEX	Mar.17, 2018	Mar. 16, 2019
Signal Generator	Rohde & Schwarz	SML03	IKW682-054	Mar.17, 2018	Mar. 16, 2019
Positioning Controller	ETS-LINDGREN	2090	N/A	N/A	N/A
Harmonic Current and Voltage Fluctuation and Flicker Test					
Equipment	**Manufacturer**	**Model No.**	**Serial No.**	**Last Cal.**	**Cal. Due Date**
Harmonic Flicker Test System	CI	5001ix-CTS-400	100321	Jul. 18, 2018	Jul. 17, 2019
5K VA	CI	500liX	59468	Jul. 18, 2018	Jul. 17, 2019

THIS DOCUMENT WAS REDACTED WITH THE PRODUCTIP REDACTION TOOL ON 2018-08-13. AT THE TIME OF GENERATING THE DOCUMENT THE ORIGINAL DOCUMENT WAS AVAILABLE ALSO. THE ORIGINAL CAN ONLY BE MADE AVAILABLE BY THE DOCUMENT OWNER.

Discharge Immunity Test					
Equipment	**Manufacturer**	**Model No.**	**Serial No.**	**Last Cal.**	**Cal. Due Date**
ESD Tester	TESEQ	NSG437	304	Jul. 21, 2017	Jul. 20, 2018
Radiated Immunity Test					
Equipment	**Manufacturer**	**Model No.**	**Serial No.**	**Last Cal.**	**Cal. Due Date**
Signal Generator	Rohde & Schwarz	SMT03	200754	Mar. 22, 2018	Mar. 21, 2019
Power Meter	Rohde & Schwarz	NRVD	110562	Feb. 12, 2018	Feb. 11, 2019
Voltage Probe	Rohde & Schwarz	URV5-Z2	12056	Feb. 12, 2018	Feb. 11, 2019
Voltage Probe	Rohde & Schwarz	URV5-Z2	12074	Feb. 12, 2018	Feb. 11, 2019
RF Amplifier	AR	50S1G4A	326720	Feb. 12, 2018	Feb. 11, 2019
Bilog Antenna	ETS	3142C	00047662	Feb. 12, 2018	Feb. 11, 2019
Horn Antenna	ARA	DRG-118A	16554	Feb. 12, 2018	Feb. 11, 2019
Electrical Fast Transient/ Surge/ Voltage Dip and Interruption Test					
Equipment	**Manufacturer**	**Model No.**	**Serial No.**	**Last Cal.**	**Cal. Due Date**
Simulator	EMTEST	UCS500N5	V0948105575	Jul. 18, 2018	Jul. 17, 2019
Auto-transformer	EMTEST	V4780S2	0109-41	Jul. 18, 2018	Jul. 17, 2019
Coupling Clamp	EMTEST	HFK	1109-04	Jul. 18, 2018	Jul. 17, 2019
Conducted Immunity Test					
Equipment	**Manufacturer**	**Model No.**	**Serial No.**	**Last Cal.**	**Cal. Due Date**
RF Generator	FRANKONIA	CIT-10/75	126B1126	Jul. 18, 2018	Jul. 17, 2019
Attenuator	FRANKONIA	59-6-33	A413	Jul. 18, 2018	Jul. 17, 2019
M-CDN	LUTHI	L-801 M2/M3	2599	Jul. 18, 2018	Jul. 17, 2019
AF2-CDN	LUTHI	L-801:AF2	2538	Mar.17, 2018	Mar. 16, 2019
EM Injection Clamp	LUTHI	EM101	35958	Jul. 18, 2018	Jul. 17, 2019

THIS DOCUMENT WAS REDACTED WITH THE PRODUCTIP REDACTION TOOL ON 2018-08-13. AT THE TIME OF GENERATING THE DOCUMENT THE ORIGINAL DOCUMENT WAS AVAILABLE ALSO. THE ORIGINAL CAN ONLY BE MADE AVAILABLE BY THE DOCUMENT OWNER.

4 Conducted Disturbance Test

4.1 Test Standard and Limit

4.1.1 Test Standard

Draft ETSI EN 301 489-1 Clause 8.4
Draft ETSI EN 301 489-3/ Draft ETSI EN 301 489-17
EN 55032: 2015 Class B

4.1.2 Test Limit

Conducted Disturbance Test Limit

Frequency	Maximum RF Line Voltage (DbμV)	
	Quasi-peak Level	Average Level
150kHz~500kHz	66 ~ 56 *	56 ~ 46 *
500kHz~5MHz	56	46
5MHz~30MHz	60	50
Remark: *Decreasing linearly with logarithm of the frequency		

4.2 Test Setup

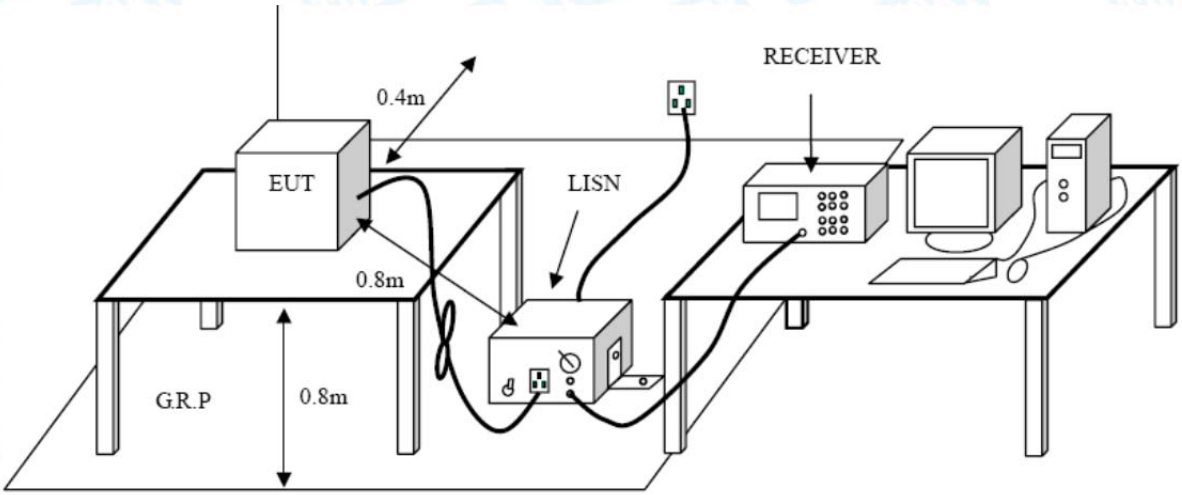

THIS DOCUMENT WAS REDACTED WITH THE PRODUCTIP REDACTION TOOL ON 2018-08-13. AT THE TIME OF GENERATING THE DOCUMENT THE ORIGINAL DOCUMENT WAS AVAILABLE ALSO. THE ORIGINAL CAN ONLY BE MADE AVAILABLE BY THE DOCUMENT OWNER.

4.3 Test Procedure

The EUT was placed 0.8 meters from the horizontal ground plane with EUT being connected to the power mains through a line impedance stabilization network (LISN). All other support equipments powered from additional LISN(s). The LISN provide 50 Ohm/ 50uH of coupling impedance for the measuring instrument.

Interconnecting cables that hang closer than 40 cm to the ground plane shall be folded back and forth in the center forming a bundle 30 to 40 cm long.

I/O cables that are not connected to a peripheral shall be bundled in the center. The end of the cable may be terminated, if required, using the correct terminating impedance. The overall length shall not exceed 1 m.
LISN at least 80 cm from the nearest part of EUT chassis.
The bandwidth of EMI test receiver is set at 9kHz, and the test frequency band is from 0.15MHz to 30MHz.

4.4 Test Data

Please refer to the Attachment A.

THIS DOCUMENT WAS REDACTED WITH THE PRODUCTIP REDACTION TOOL ON 2018-08-13. AT THE TIME OF GENERATING THE DOCUMENT THE ORIGINAL DOCUMENT WAS AVAILABLE ALSO. THE ORIGINAL CAN ONLY BE MADE AVAILABLE BY THE DOCUMENT OWNER.

5 Conducted Emissions(Asymmetric Mode)

5.1 Test Standard and Limit

5.1.1. Test Standard

Draft ETSI EN 301 489-1 Clause 8.4
Draft ETSI EN 301 489-3/ Draft ETSI EN 301 489-17
EN 55032: 2015 Class B

5.1.2. Limits

Limits for class A equipment

Frequency range (MHz)	Voltage Limits dB(μV)		Current limits dB(μA)	
	Quasi-peak	Average	Quasi-peak	Average
0.15 ~ 0.5	97 ~ 87	84 ~ 74	53 ~ 43	40 ~ 30
0.5 ~ 30	87	74	43	30
Note: if "150Ω to50Ω adaptor" applied, correction factor of 9.5dB should be added to the test data.				

Limits for class B equipment

Frequency range (MHz)	Voltage Limits dB(μV)		Current limits dB(μA)	
	Quasi-peak	Average	Quasi-peak	Average
0.15 ~ 0.5	84 ~ 74	74 ~ 64	40 ~ 30	30 ~ 20
0.5 ~ 30	74	64	30	20
Note: if "150Ω to50Ω adaptor" applied, correction factor of 9.5dB should be added to the test data.				

5.2 Test setup

☒Coupling device: CVP and Current probe (alternative method 1)

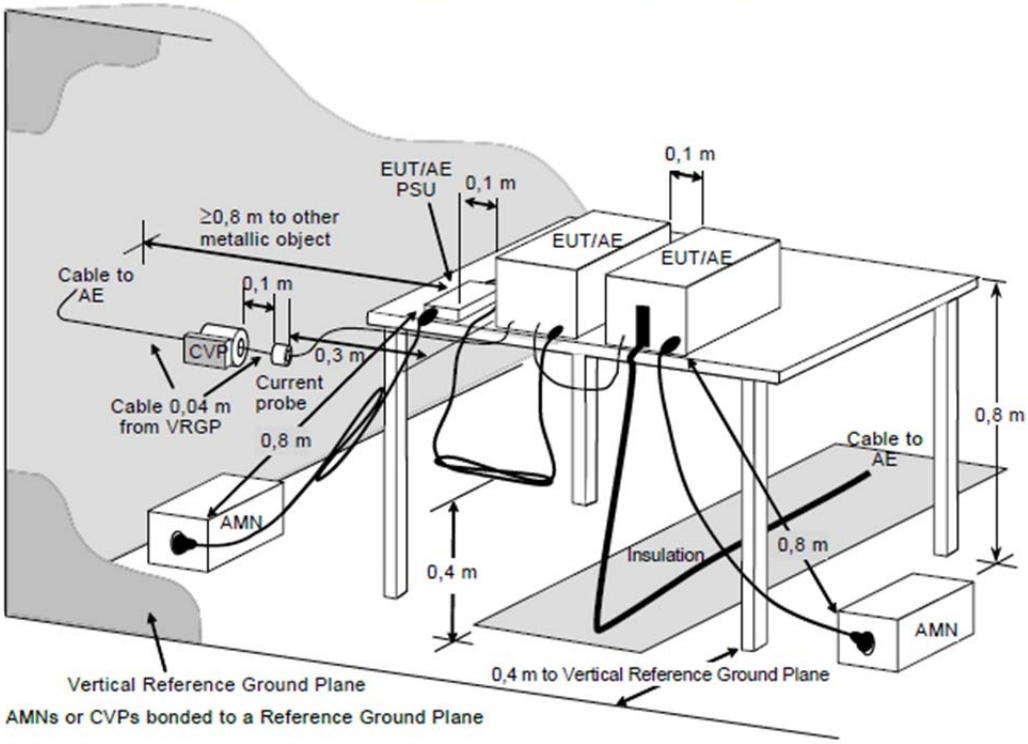

☐Coupling device: CVP and Current probe (alternative method 2)

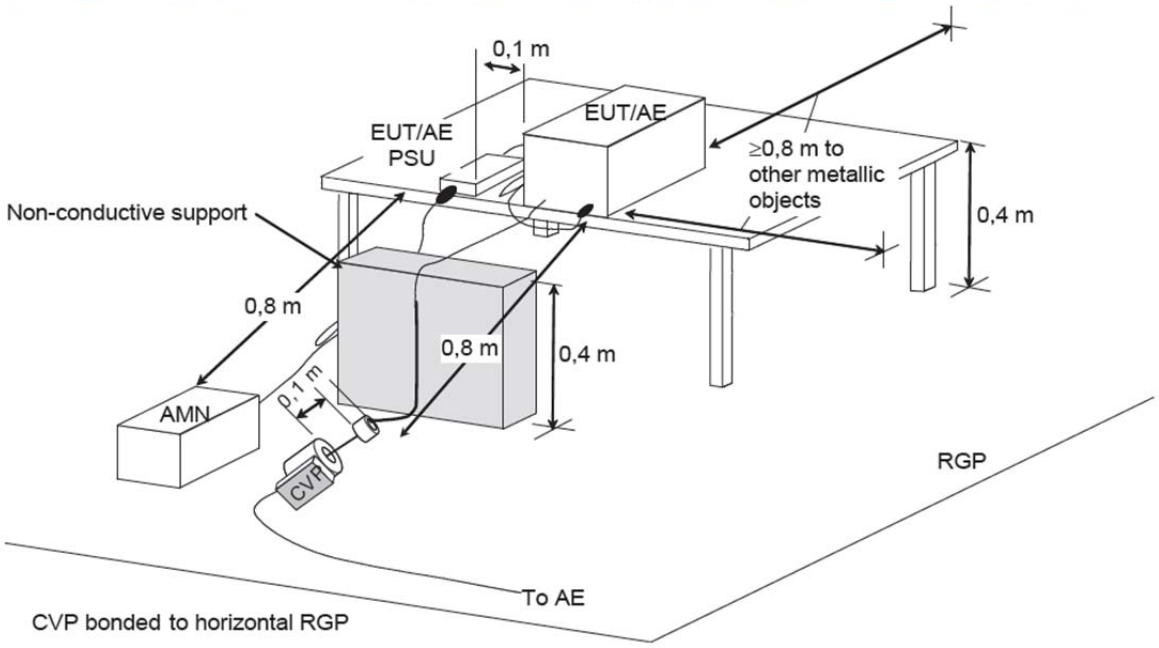

☐Coupling device: Current probe / "150Ω to50Ω adaptor" / high impedance probe (alternative method 1)

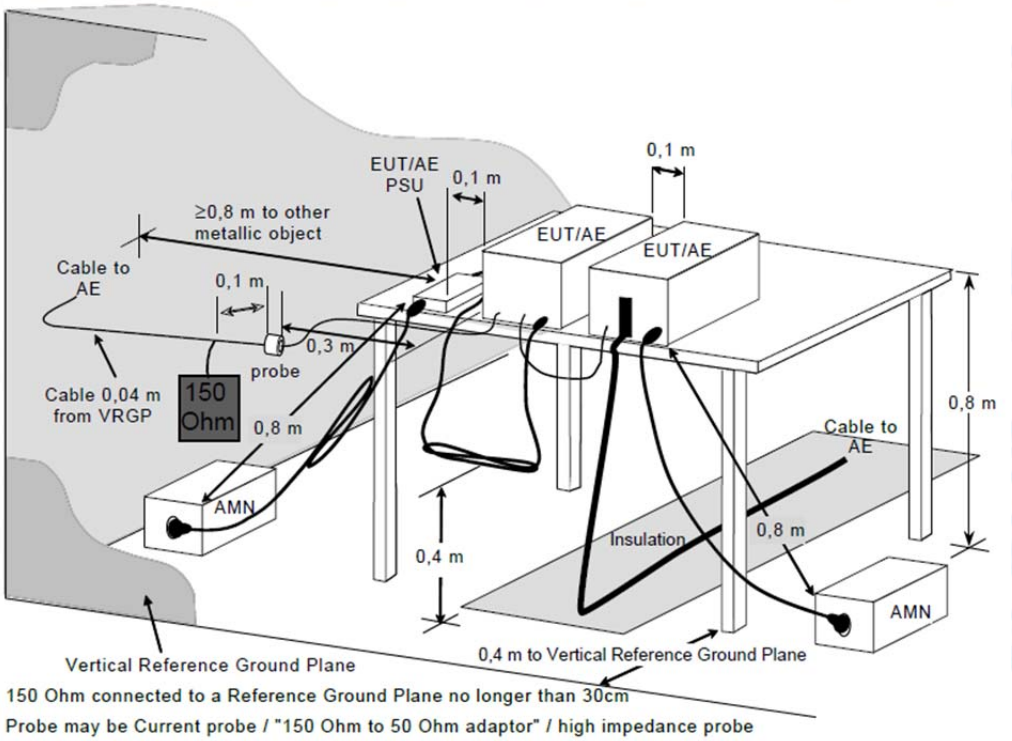

THIS DOCUMENT WAS REDACTED WITH THE PRODUCTIP REDACTION TOOL ON 2018-08-13. AT THE TIME OF GENERATING THE DOCUMENT THE ORIGINAL DOCUMENT WAS AVAILABLE ALSO. THE ORIGINAL CAN ONLY BE MADE AVAILABLE BY THE DOCUMENT OWNER.

THIS DOCUMENT WAS REDACTED WITH THE PRODUCTIP REDACTION TOOL ON 2018-08-13. AT THE TIME OF GENERATING THE DOCUMENT THE ORIGINAL DOCUMENT WAS AVAILABLE ALSO. THE ORIGINAL CAN ONLY BE MADE AVAILABLE BY THE DOCUMENT OWNER.

☐Coupling device: Current probe / “150Ω to50Ω adaptor” / high impedance probe (alternative method 2)

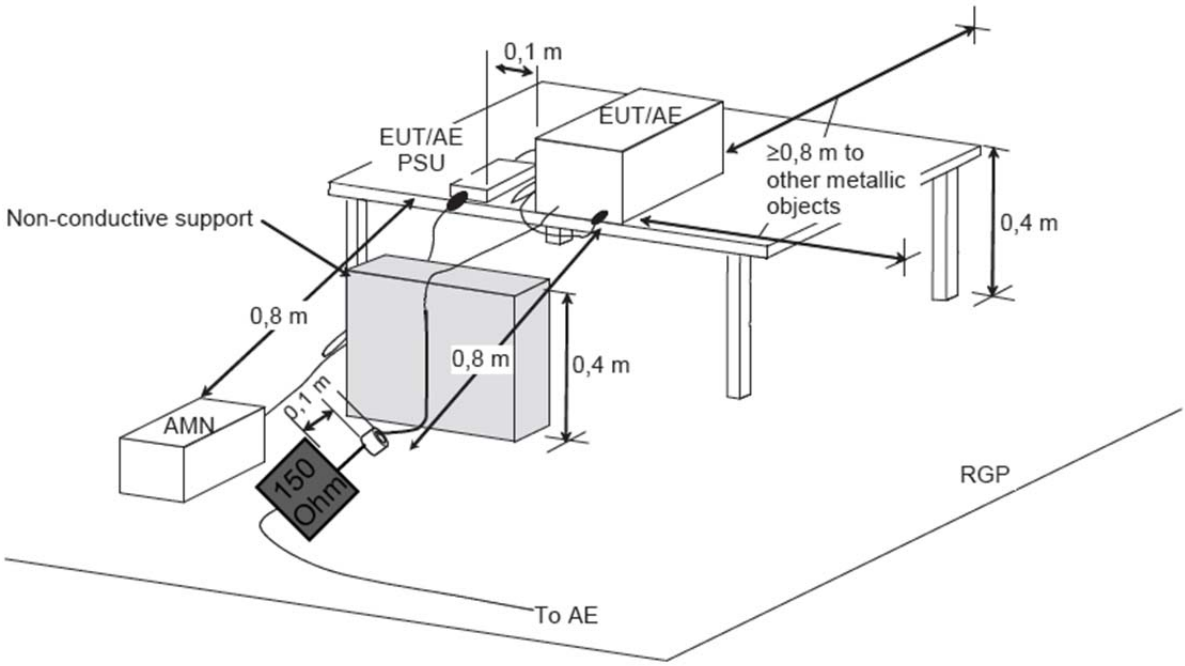

150 Ohm connected to a Reference Ground Plane no longer than 30cm

Probe may be Current probe / "150 Ohm to 50 Ohm adaptor" / high impedance probe

☐Coupling device: AAN

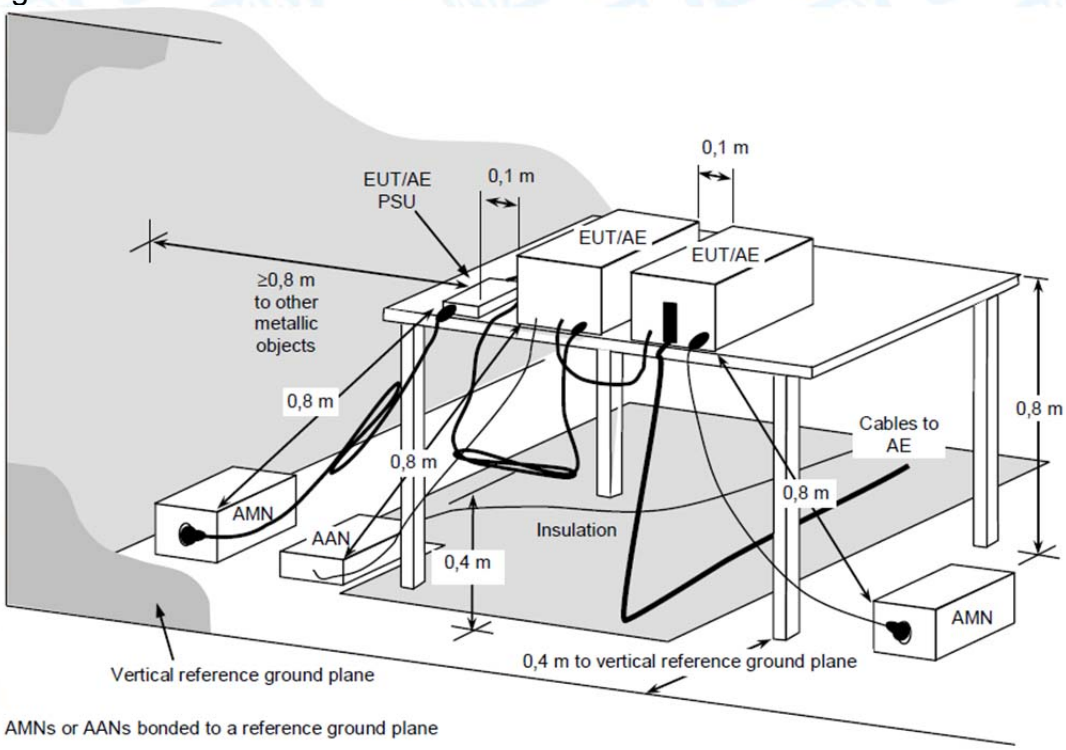

AMNs or AANs bonded to a reference ground plane

THIS DOCUMENT WAS REDACTED WITH THE PRODUCTIP REDACTION TOOL ON 2018-08-13. AT THE TIME OF GENERATING THE DOCUMENT THE ORIGINAL DOCUMENT WAS AVAILABLE ALSO. THE ORIGINAL CAN ONLY BE MADE AVAILABLE BY THE DOCUMENT OWNER.

5.3 Test Setup and Test Procedure

Detailed test procedurewas followingclause C.4.1 of EN 55032.

Frequency range 150kHz – 30MHz was checked and EMI receiver measurement bandwidth was set to 9 kHz.

DataPort	Measurementtype	Coupling device	No. of Pairs
BalancedUnscreened	Voltage	AAN	≤ 4
BalancedUnscreened	Voltage andCurrent	CVP& Current probe	>4 or unable to AAN
Screenedor Coaxial	Voltage	AAN	N/A
Screenedor Coaxial	Voltage orCurrent	Current probe / “150Ω to50Ω adaptor” / high impedance probe	N/A
Unbalancedcables	Voltage and Current	CVP& Current probe	N/A

5.4 Test Data

No requirement for this test item

THIS DOCUMENT WAS REDACTED WITH THE PRODUCTIP REDACTION TOOL ON 2018-08-13. AT THE TIME OF GENERATING THE DOCUMENT THE ORIGINAL DOCUMENT WAS AVAILABLE ALSO. THE ORIGINAL CAN ONLY BE MADE AVAILABLE BY THE DOCUMENT OWNER.

6 Radiated Disturbance Test

6.1 Test Standard and Limit

6.1.1 Test Standard

DraftETSI EN 301 489-1 Clause 8.2
Draft ETSI EN 301 489-3/ Draft ETSI EN 301 489-17
EN55032: 2015 Class B

6.1.2 Test Limit

Radiated Disturbance Test Limit

FREQUENCY (MHz)	Class A (at 10m)	Class B (at 10m)
	dBuV/m	dBuV/m
30 – 230	40	30
230 – 1000	47	37

Notes:
(1) The limit for radiated test was performed according to as following: EN55032
(2) The tighter limit applies at the band edges.
(3) Emission level (dBuV/m)=20log Emission level (uV/m).

Limits of Radiated Emission Measurement (Above 1000MHz)

FREQUENCY (MHz)	Class A (dBuV/m) (at 3m)		Class B (dBuV/m) (at 3m)	
	PEAK	AVERAGE	PEAK	AVERAGE
1000-3000	76	56	70	50
3000-6000	80	60	74	54

Notes:
(1) The lower limit applies at the transition frequency.

Frequency Rangeof Radiated Measurement

Highest frequency generated or Upper frequency of measurement used in the device or on which the device operates or tunes (MHz)	Range (MHz)
Below 108	1000
108 – 500	2000
500 – 1000	5000
Above 1000	5th harmonic of the highest frequency or 6 GHz, whichever is lower

THIS DOCUMENT WAS REDACTED WITH THE PRODUCTIP REDACTION TOOL ON 2018-08-13. AT THE TIME OF GENERATING THE DOCUMENT THE ORIGINAL DOCUMENT WAS AVAILABLE ALSO. THE ORIGINAL CAN ONLY BE MADE AVAILABLE BY THE DOCUMENT OWNER.

6.2 Test Setup

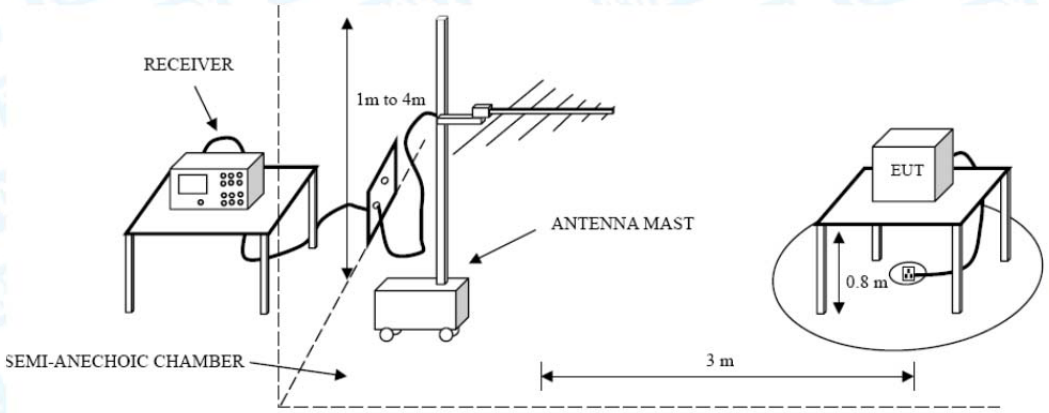

Below-1G

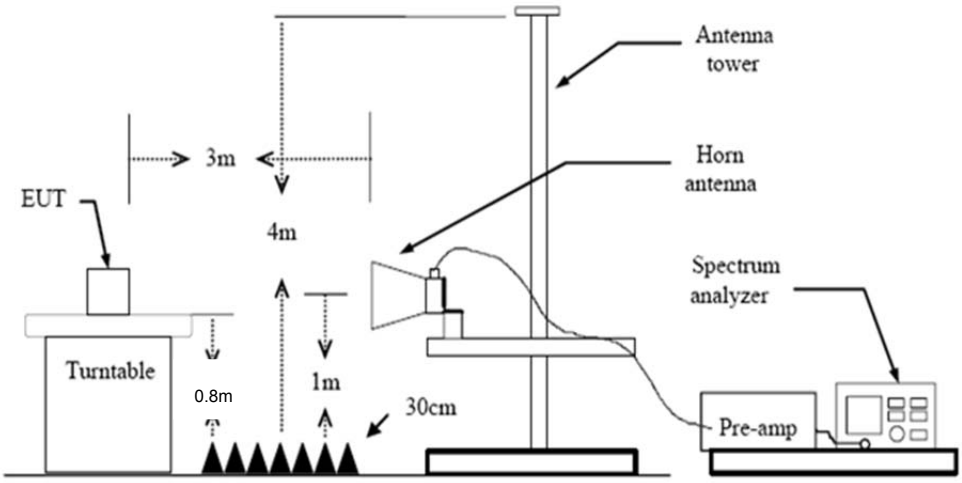

Above 1G

6.3 Test Procedure

The EUT was placed on the top of a rotating table 0.8 meters above the ground at a 3m. The table was rotated 360 degrees to determine the position of the highest radiation.

The height of the equipment or of the substitution antenna shall be 0.8 m; the height of the test antenna shall vary between 1 m to 4 m. Both horizontal and vertical polarizations of the antenna are set to make the measurement.

The initial step in collecting radiated emission data is a spectrum QuasiPeak detector mode scanning the measurement frequency range.

If the Peak Mode measured value compliance with and lower than Quasi Peak Mode Limit, the EUT shall be deemed to meet QP Limits and then no additional QP Mode measurement performed.

6.4 Test Data

Please refer to the Attachment B.

THIS DOCUMENT WAS REDACTED WITH THE PRODUCTIP REDACTION TOOL ON 2018-08-13. AT THE TIME OF GENERATING THE DOCUMENT THE ORIGINAL DOCUMENT WAS AVAILABLE ALSO. THE ORIGINAL CAN ONLY BE MADE AVAILABLE BY THE DOCUMENT OWNER.

7 Harmonic Current Emission Test

7.1 Test Standard and Limit

7.1.1 Test Standard

Draft ETSI EN 301 489-1 Clause 8.5
Draft ETSI EN 301 489-3/ Draft ETSI EN 301 489-17
EN 61000-3-2

7.1.2 Limits

IEC 555-2					
Table- Ⅰ			Table- Ⅱ		
Equipment Category	Harmonic order n	Max. permissible harmonic current (in Ampers)	Equipment Category	Harmonic order n	Max. permissible harmonic current (in Ampers)
NonPortableToolsorTVReceivers	odd harmonics		TV Receivers	odd harmonics	
	3	2.30		3	0.8
	5	1.14		5	0.65
	7	0.77		7	0.45
	9	0.40		9	0.30
	11	0.33		11	0.17
	13	0.21		13	0.12
	15≤n≤39	0.15·15/n		15≤n≤39	0.10·15/n
	even harmonics			even harmonics	
	2	1.08		2	0.30
	4	0.43		4	0.15
	8	0.30			
	8≤n≤40	0.23·8/n		DC	0.05

THIS DOCUMENT WAS REDACTED WITH THE PRODUCTIP REDACTION TOOL ON 2018-08-13. AT THE TIME OF GENERATING THE DOCUMENT THE ORIGINAL DOCUMENT WAS AVAILABLE ALSO. THE ORIGINAL CAN ONLY BE MADE AVAILABLE BY THE DOCUMENT OWNER.

EN 61000-3-2					
Equipment Category	Max. permissible harmonic current (in Ampers)	Equipment Category	Harmonic order n	Max. permissible harmonic current (in A)	(mA/w)
Class A	Same as Limits Specified in Table Ⅰ But onlyodd Harmonics required	Class D	3	2.30	3.4
			5	1.14	1.9
			7	0.77	1.0
			9	0.40	0.5
			11	0.33	0.35
			8≤n≤40	See Tabel Ⅰ	3.85/n
			Only odd harmonics required		

7.2 Test Setup

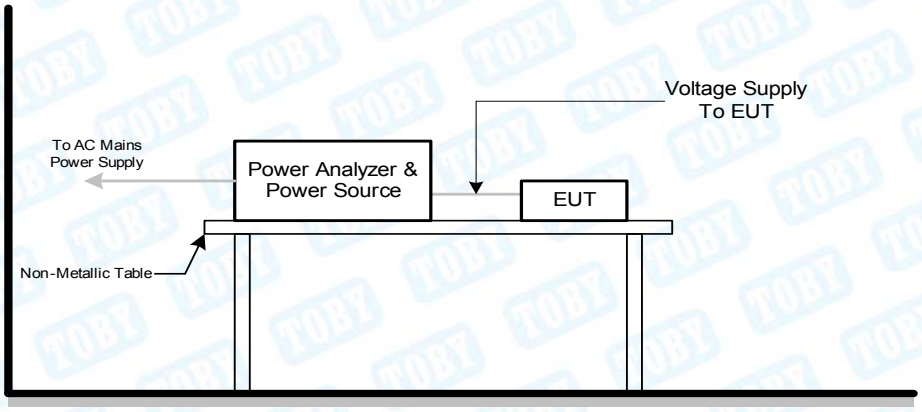

7.3 Test Procedure

The EUT was placed on the top of a wooden table 0.8 meters above the ground and operated to produce the maximum harmonic components under normal operating conditions.
The classification of EUT is according to section 5 of EN 61000-3-2.The EUT is classified as follows:

Class A: Balanced three-phase equipment, Household appliances excluding equipment as Class D, Tools excluding portable tools, Dimmers for incandescent lamps, audio equipment, equipment not specified in one of the three other classes.
Class B: Portable tools.Arc welding equipment which is not professional equipment.
Class C: Lighting equipment.
Class D: Equipment having a specified power less than or equal to600 W of the following types: Personal computers and personal computer monitors and television receivers.

7.4 Test Data

No requirement for this test item

THIS DOCUMENT WAS REDACTED WITH THE PRODUCTIP REDACTION TOOL ON 2018-08-13. AT THE TIME OF GENERATING THE DOCUMENT THE ORIGINAL DOCUMENT WAS AVAILABLE ALSO. THE ORIGINAL CAN ONLY BE MADE AVAILABLE BY THE DOCUMENT OWNER.

8 Voltage Fluctuation and Flicker Test

8.1 Test Standard and Limit

8.1.1 Test Standard

Draft ETSI EN 301 489-1 Clause 8.4
Draft ETSI EN 301 489-3/ Draft ETSI EN 301 489-17
EN 61000-3-3

8.1.2 Limit

Flicker Test Limit

Tests	Limits		Descriptions
	IEC555-3	IEC 61000-3-3	
Pst	≤ 1.0, Tp= 10 min.	≤ 1.0, Tp= 10 min.	Short Term Flicker Indicator
Plt	N/A	≤ 0.65, Tp=2 hr.	Long Term Flicker Indicator
dc	≤ 3 %	≤ 3 %	Relative Steady-State V-Chang
dmax	≤ 4 %	≤ 4 %	Maximum Relative V-change
d (t)	N/A	≤ 3% for > 200 ms	RelativeV-change characteristic

8.2 Test Setup

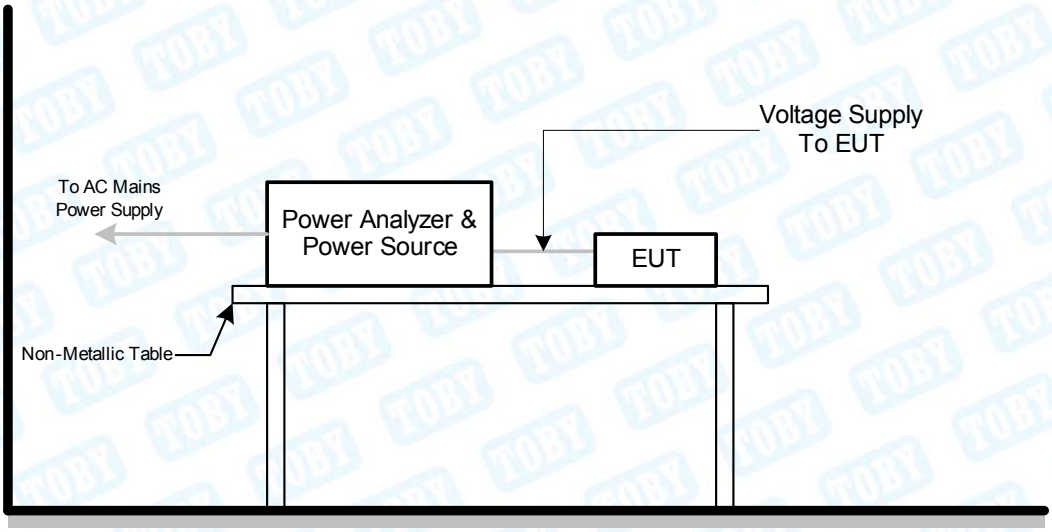

THIS DOCUMENT WAS REDACTED WITH THE PRODUCTIP REDACTION TOOL ON 2018-08-13. AT THE TIME OF GENERATING THE DOCUMENT THE ORIGINAL DOCUMENT WAS AVAILABLE ALSO. THE ORIGINAL CAN ONLY BE MADE AVAILABLE BY THE DOCUMENT OWNER.

8.3 Test Procedure

8.3.1 Fluctuation and Flickers Test:

Testswas performed according to the Test Conditions/Assessment of Voltage Fluctuations specified in Clause 5.0/6.0 of IEC555-3 and/or Clause 6.0/4.0 of IEC/EN 61000-3-3 depend on which standard adopted for compliance measurement.

8.3.2 All types of harmonic current and/or voltage fluctuation in this report are assessed by direct measurement using flicker-meter.

8.3.3 For the actual test configuration, please refer to the related Item –Block Diagram of system tested.

8.4 Test Data

No requirement for this test item

THIS DOCUMENT WAS REDACTED WITH THE PRODUCTIP REDACTION TOOL ON 2018-08-13. AT THE TIME OF GENERATING THE DOCUMENT THE ORIGINAL DOCUMENT WAS AVAILABLE ALSO. THE ORIGINAL CAN ONLY BE MADE AVAILABLE BY THE DOCUMENT OWNER.

9 Electrostatic Discharge Immunity Test

9.1 Test Requirements

9.1.1 Test Standard

Draft ETSI EN 301 489-1 Clause 9.3
Draft ETSI EN 301 489-3/ Draft ETSI EN 301 489-17
EN 61000-4-2

9.1.2 Test Level

Discharge Impedance:	330 ohm/ 150pF
Discharge Voltage:	Air Discharge：2kV/4kV/8kV(Direct) Contact Discharge: 2kV/4kV (Direct /Indirect)
Polarity:	Positive& Negative
Number of Discharge:	Air Discharge: min.20 times at each test point Contact Discharge: min.200 times in total
Discharge Mode:	Single Discharge
Discharge Period:	1 second minimum

9.1.3 4Performance criterion: B

9.2 Test Setup

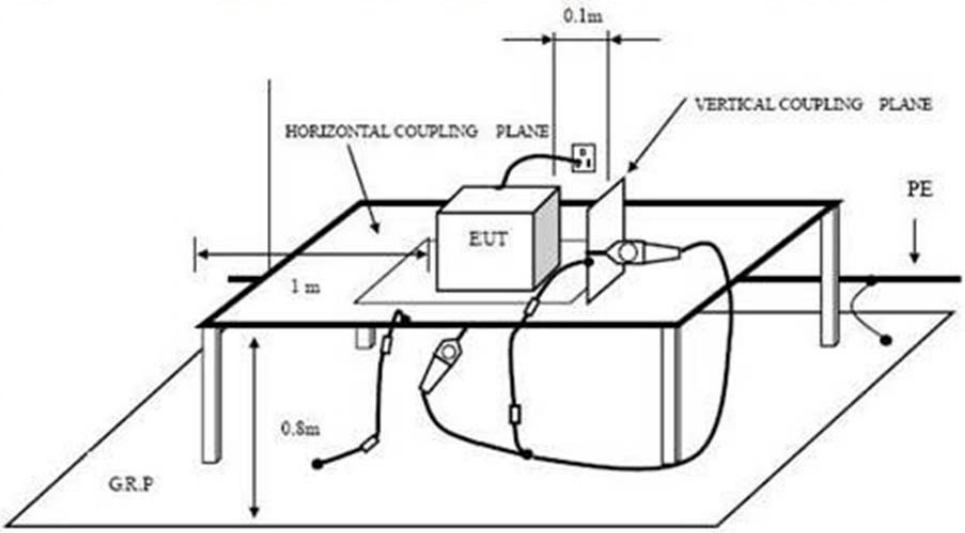

INDIRECT DISCHARGE SETUP

THIS DOCUMENT WAS REDACTED WITH THE PRODUCTIP REDACTION TOOL ON 2018-08-13. AT THE TIME OF GENERATING THE DOCUMENT THE ORIGINAL DOCUMENT WAS AVAILABLE ALSO. THE ORIGINAL CAN ONLY BE MADE AVAILABLE BY THE DOCUMENT OWNER.

9.3 Test Procedure

9.3.1 Air Discharge:

This test is done on a non-conductive surface. The round discharge tip of the discharge electrode shall be approached as fast as possible to touch the EUT. After each discharge, the discharge electrode shallbe removed from the EUT. The generator is then re-triggered for a new single discharge and repeated 10 times for each pre-selected test point. This procedure shall be repeated until all the air discharge completed.

9.3.2 Contact Discharge:

All the procedure shall be same as air discharge. Except that the tip of the discharge electrode shall touch the EUT before the discharge switch is operated.

9.3.3 Indirect discharge for horizontal coupling plane

At least 10 single discharges (in the most sensitive polarity) shall be applied at the front edge of each HCP opposite the center point of each unit (if applicable) of the EUT and 0.1m from the front of the EUT. The long axis of the discharge electrode shall be in the plane of the HCP and perpendicular to its front edge during the discharge.

9.3.4 Indirect discharge for vertical coupling plane

At least 10 single discharges (in the most sensitive polarity) shall be applied to the center of one vertical edge of the coupling plane. The coupling plane, of dimensions 0.5m X 0.5m, is placed parallel to, and positioned at a distance of 0.1m from the EUT. Discharges shall be applied to the coupling plane, with this plane in sufficient different positions that the four faces of the EUT are completely illuminated.

9.4 Test Data

Please refer to the Attachment C.

THIS DOCUMENT WAS REDACTED WITH THE PRODUCTIP REDACTION TOOL ON 2018-08-13. AT THE TIME OF GENERATING THE DOCUMENT THE ORIGINAL DOCUMENT WAS AVAILABLE ALSO. THE ORIGINAL CAN ONLY BE MADE AVAILABLE BY THE DOCUMENT OWNER.

10Radiated Electromagnetic Field Immunity test

10.1 Test Requirements

10.1.1 Test Standard

Draft ETSI EN 301 489-1 Clause 9.2
Draft ETSI EN 301 489-3/ Draft ETSI EN 301 489-17
EN 61000-4-3

10.1.2 Test Level

Test Level for Radiated Electromagnetic Field Immunity Test

Port	Test Specification
EnclosurePort	80-6000MHz 3 V/m 80 % AM (1kHz)

10.1.3 Performance criterion: A

10.2 Test Setup

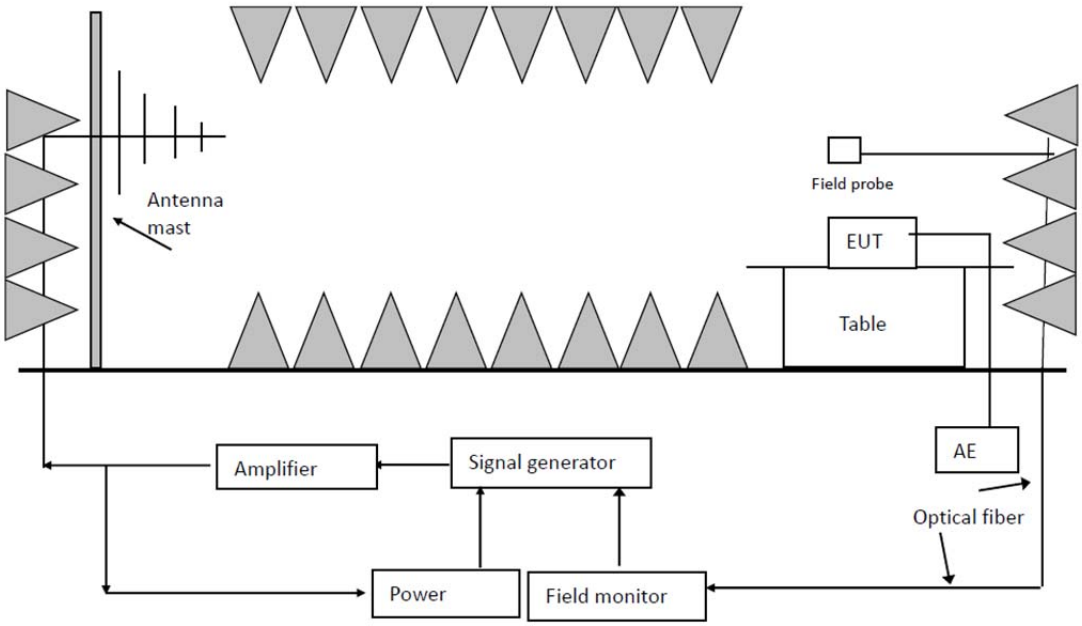

THIS DOCUMENT WAS REDACTED WITH THE PRODUCTIP REDACTION TOOL ON 2018-08-13. AT THE TIME OF GENERATING THE DOCUMENT THE ORIGINAL DOCUMENT WAS AVAILABLE ALSO. THE ORIGINAL CAN ONLY BE MADE AVAILABLE BY THE DOCUMENT OWNER.

10.3 Test Procedure

The EUT are placed on a table, which is 0.8 meter high above the ground. The EUT is set 3 meters away from the transmitting antenna, which is mounted on an antenna tower. Both horizontal and vertical polarization of the antenna is set on test. Each of the four sides of the EUT must be faced this transmitting antenna and measured individually.

In order to judge the EUT performance, a camera is used to monitor its screen.

All the scanning conditions are as following:

Condition of Test	**Remark**
Fielded Strength	3V/m
Radiated Signal	80%AM,1kHz Since Wave
Scanning Frequency	80-6000MHz
Sweep time of radiated	0.0015 Decade/s
Dwell Time	3 Sec.

10.4 Test Data

Please refer to the Attachment D.

THIS DOCUMENT WAS REDACTED WITH THE PRODUCTIP REDACTION TOOL ON 2018-08-13. AT THE TIME OF GENERATING THE DOCUMENT THE ORIGINAL DOCUMENT WAS AVAILABLE ALSO. THE ORIGINAL CAN ONLY BE MADE AVAILABLE BY THE DOCUMENT OWNER.

11 Electrical Fast Transient/Burst Test

11.1 Test Requirements

11.1.1 Test Standard

Draft ETSI EN 301 489-1 Clause 9.4
Draft ETSI EN 301 489-3/ Draft ETSI EN 301 489-17
EN 61000-4-4

11.1.2 Test Level

Test Level for Electrical Fast Transient Test

	On Switching Adapter Lines	On I/O (Input/Output) Signal data and control lines
Test Voltage:	1 KV	0.5 KV
Polarity:	Positive&Negative	
Impulse Wave Shape:	5/50ns	
Burst Duration:	15ms	
Burst Period:	300ms	
Test Duration:	Not less than 1 min	

11.1.3 Performance criterion: B

11.2 Test Setup

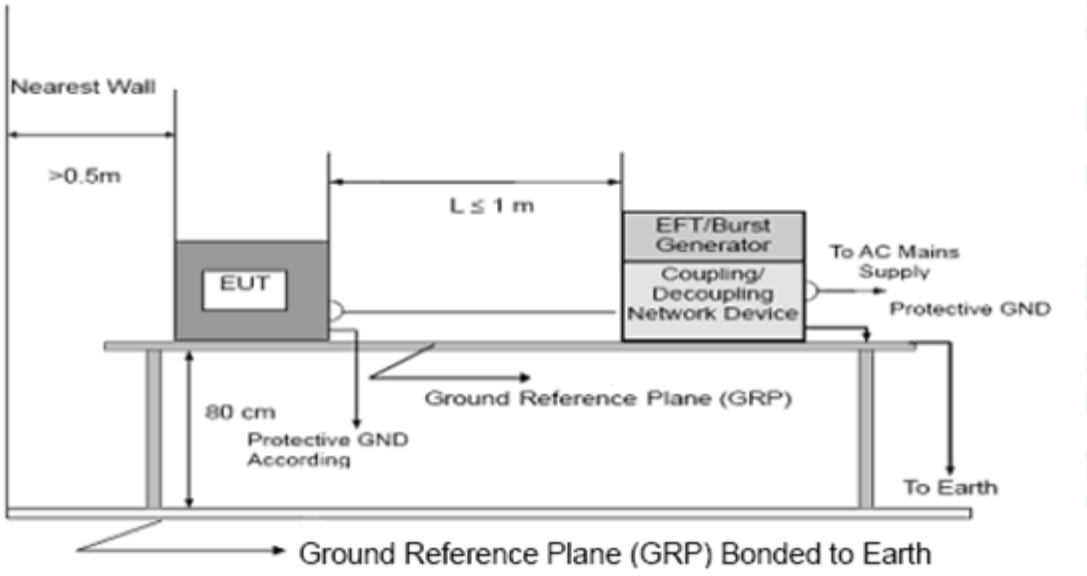

THIS DOCUMENT WAS REDACTED WITH THE PRODUCTIP REDACTION TOOL ON 2018-08-13. AT THE TIME OF GENERATING THE DOCUMENT THE ORIGINAL DOCUMENT WAS AVAILABLE ALSO. THE ORIGINAL CAN ONLY BE MADE AVAILABLE BY THE DOCUMENT OWNER.

11.3 Test Procedure

11.3.1 For input and output AC power ports:

The EUT is connected to the power mains by using a coupling device which couples the EFT interference signal to AC power lines. Both polarities of the test voltage should be applied during compliance test and the duration of the test is 1minute.

11.3.2 For signal lines and control lines ports:

A coupling clamp is use to couple the EFT interference signal to the signal and control lines. Both polarities of the test voltage should be applied during compliance test and the duration of the test is 1 minute.

11.3.3 For DC input and DC output power ports:

The EUT is connected to the power mains by using a coupling device which couples the EFT interference signal to DC power lines. Both polarities of the test voltage should be applied during compliance test and the duration of the test is 1 minute.

11.4 Test Data

Please refer to the Attachment E.

THIS DOCUMENT WAS REDACTED WITH THE PRODUCTIP REDACTION TOOL ON 2018-08-13. AT THE TIME OF GENERATING THE DOCUMENT THE ORIGINAL DOCUMENT WAS AVAILABLE ALSO. THE ORIGINAL CAN ONLY BE MADE AVAILABLE BY THE DOCUMENT OWNER.

12SurgeImmunity Test

12.1 Test Requirements

12.1.1 Test Standard

Draft ETSI EN 301 489-1 Clause 9.8
Draft ETSI EN 301 489-3/ Draft ETSI EN 301 489-17
EN 61000-4-5

12.1.2 Level

Test Level for Surge Immunity Test

Basic Standard:	**EN 61000-4-5**
Wave-Shape:	Combination Wave 1.2/50us Open Circuit Voltage 8/20us Short Circuit Current
Test Voltage	Power Line:0.5kV,1kV,2kV
Surge Input/Output:	L1-I2,I1-PE,L2-PE
Generator Source:	2 ohm between networks
Impedance:	12ohm between network and ground
Polarity:	Positive/Negative
Phase Angle:	0/90/180/270
Pulse Repetition Rate:	1 time/min.(maximum)
Number of Tests:	5 positive and 5 negative at selected points

12.1.3 Performance criterion: B

12.2 Test Setup

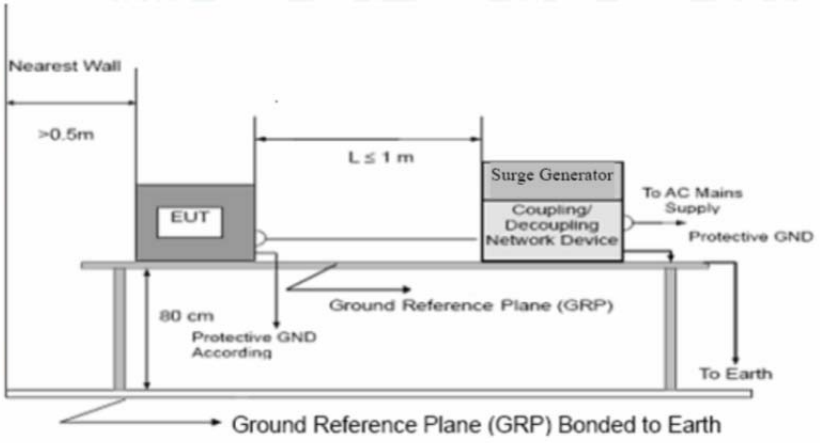

THIS DOCUMENT WAS REDACTED WITH THE PRODUCTIP REDACTION TOOL ON 2018-08-13. AT THE TIME OF GENERATING THE DOCUMENT THE ORIGINAL DOCUMENT WAS AVAILABLE ALSO. THE ORIGINAL CAN ONLY BE MADE AVAILABLE BY THE DOCUMENT OWNER.

12.3 Test Procedure

12.3.1 Set up the EUT and test generator.

12.3.2 For line to line coupling mode, provide a 1.0 KV 1.2/50us voltage surge

12.3.3 (at open-circuit condition) and 8/20us current surge to EUT selected points.

12.3.4 At least 5 positive and 5 negative (polarity) tests with a maximum 1/min repetition rate areconducted during test.

12.3.5 Different phase angles are done individually.

12.3.6 Record the EUT operating situation during compliance test and decide the EUT immunity criterion for above each test.

12.4 Test Data

Please refer to the Attachment F.

13RF Common Mode

13.1 Test Requirements

13.1.1 Test Standard

Draft ETSI EN 301 489-1 Clause 9.5
Draft ETSI EN 301 489-3/ Draft ETSI EN 301 489-17
EN 61000-4-6

13.1.2 Test Level

Test Level for RF Common Mode

Port	Test Specification
Input AC power port	0.15MHz~80MHz 3V(r.m.s.) (unmodulated)

13.1.3 Performance criterion: A

13.2 Test Setup

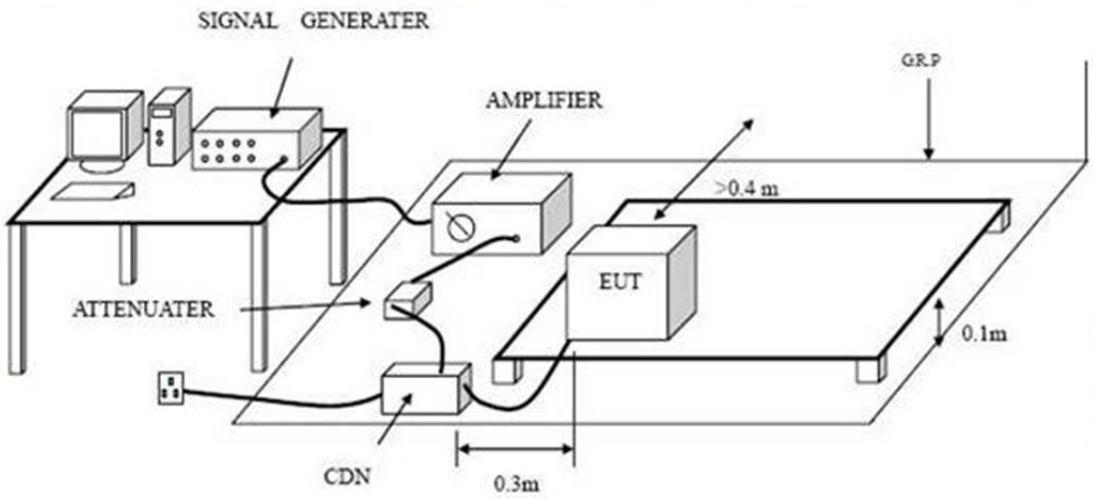

THIS DOCUMENT WAS REDACTED WITH THE PRODUCTIP REDACTION TOOL ON 2018-08-13. AT THE TIME OF GENERATING THE DOCUMENT THE ORIGINAL DOCUMENT WAS AVAILABLE ALSO. THE ORIGINAL CAN ONLY BE MADE AVAILABLE BY THE DOCUMENT OWNER.

THIS DOCUMENT WAS REDACTED WITH THE PRODUCTIP REDACTION TOOL ON 2018-08-13. AT THE TIME OF GENERATING THE DOCUMENT THE ORIGINAL DOCUMENT WAS AVAILABLE ALSO. THE ORIGINAL CAN ONLY BE MADE AVAILABLE BY THE DOCUMENT OWNER.

13.3 Test Procedure

13.3.1 Set up the EUT, CDN and test generators.

13.3.2 Let the EUT work in test mode and test it.

13.3.3 The EUT are placed on an insulating support 0.1m high above a ground reference plane. CDN (coupling and decoupling device) is placed on the ground plane about 0.3m from EUT. Cables between CDN and EUT are as short as possible, and their height above the ground reference plane shall be between 30 and 50 mm (where possible).

13.3.4 The disturbance signal description below is injected to EUT through CDN.

13.3.5 The EUT operates within its operational mode(s) under intended climatic conditions after power on.

13.3.6 The frequency range is swept from 0.150MHz to 230MHz using 3V signal level, and with the disturbance signal 80% amplitude modulated with a 1KHz sine wave.

13.3.7 The rate of sweep shall not exceed 1.5*10-3decades/s. Where the frequency is swept incrementally, the step size shall not exceed 1% of the start and thereafter 1% of the preceding frequency value.

13.3.8 Recording the EUT operating situation during compliance testing and decide the EUT immunity criterion.

13.4 Test Data

Please refer to the Attachment G.

THIS DOCUMENT WAS REDACTED WITH THE PRODUCTIP REDACTION TOOL ON 2018-08-13. AT THE TIME OF GENERATING THE DOCUMENT THE ORIGINAL DOCUMENT WAS AVAILABLE ALSO. THE ORIGINAL CAN ONLY BE MADE AVAILABLE BY THE DOCUMENT OWNER.

14Voltage Dips and Interruptions Immunity Test

14.1 Test Requirements

14.1.1 Test Standard

Draft ETSI EN 301 489-1 Clause 9.7
Draft ETSI EN 301 489-3/ Draft ETSI EN 301 489-17
EN 61000-4-11

14.1.2 Level

Test Level for Voltage Dips and Interruptions

Basic Standard:	**EN 61000-4-11**
Required Performance:	B(For 100% Voltage Dips) B(For 100% Voltage Dips) C(For 30% Voltage Dips) C(For 100% Voltage Interruptions)
Test Duration Time:	Minimum three test events in sequence
Interval Between Event:	Minimum ten seconds
Phase Angle:	0°/45°/90°/135°/180°/225°/270°/315°/360°
Test Cycle:	3 times

14.2 Test Setup

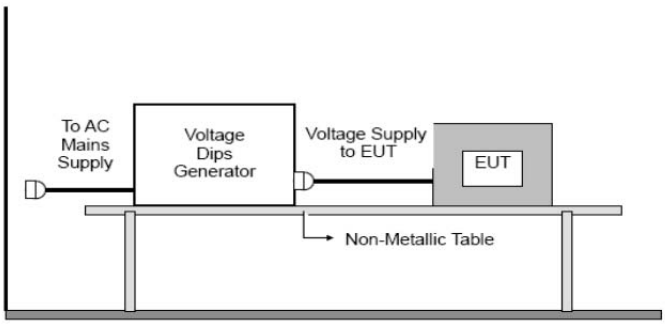

14.3 Test Procedure

The EUT shall be tested for each selected combination of test levels and duration witha sequence of three dips/interruptions with intervals of 10 s minimum (between eachtest event). Each representative mode of operation shall be tested. Abrupt changes insupply voltage shall occur at zero crossings of the voltage waveform.

14.4 Test Data

Please refer to the Attachment H.

15Photographs - Constructional Details

Photo 1 Appearance of EUT

Photo 2 Appearance of EUT

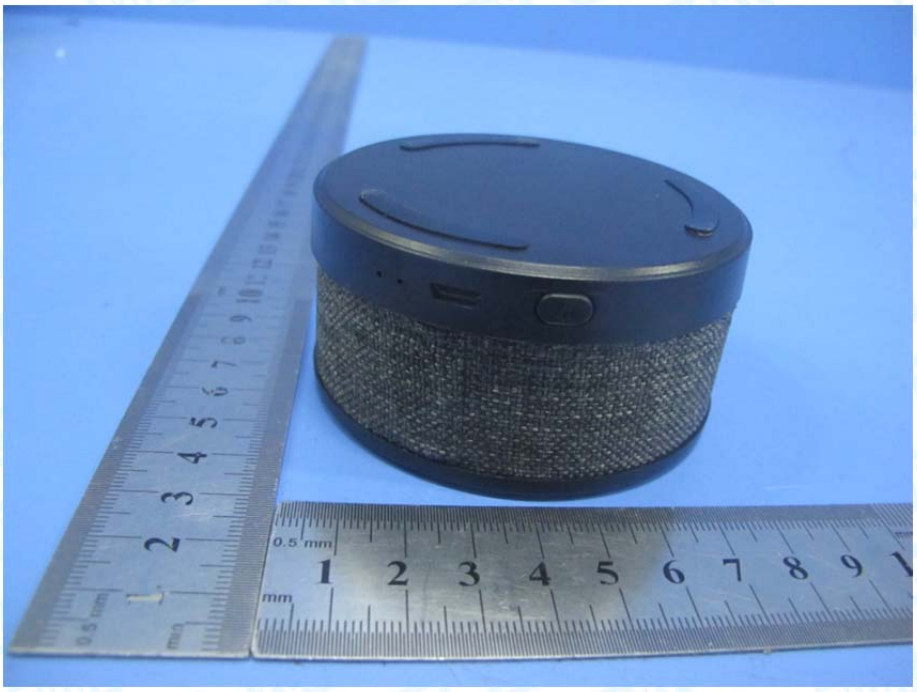

THIS DOCUMENT WAS REDACTED WITH THE PRODUCTIP REDACTION TOOL ON 2018-08-13. AT THE TIME OF GENERATING THE DOCUMENT THE ORIGINAL DOCUMENT WAS AVAILABLE ALSO. THE ORIGINAL CAN ONLY BE MADE AVAILABLE BY THE DOCUMENT OWNER.

Photo 3 Appearance of EUT

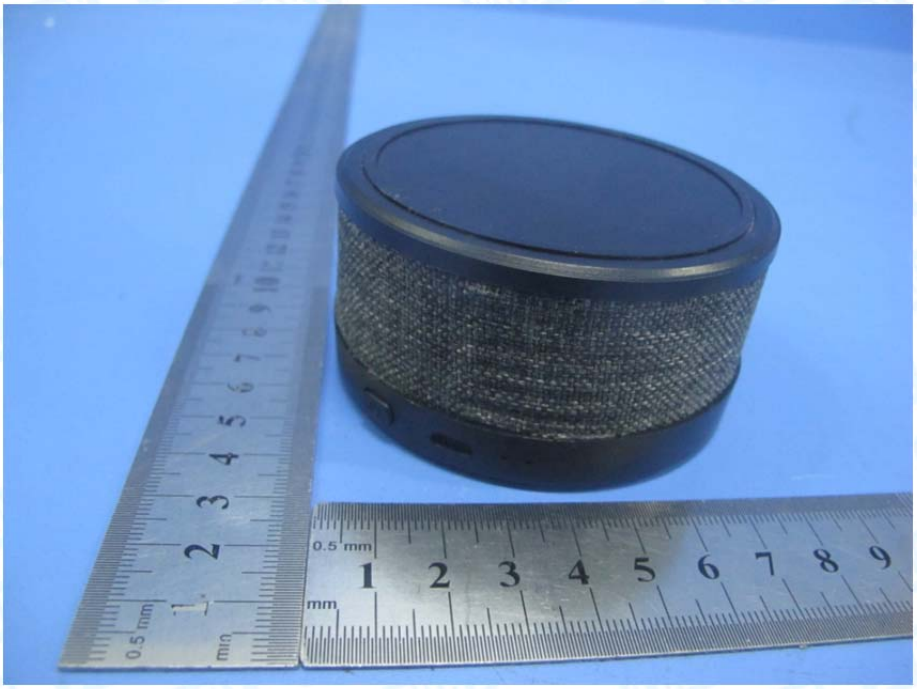

Photo 4 Appearance of EUT

THIS DOCUMENT WAS REDACTED WITH THE PRODUCTIP REDACTION TOOL ON 2018-08-13. AT THE TIME OF GENERATING THE DOCUMENT THE ORIGINAL DOCUMENT WAS AVAILABLE ALSO. THE ORIGINAL CAN ONLY BE MADE AVAILABLE BY THE DOCUMENT OWNER.

Photo 5 Appearance of EUT

Photo 6 Appearance of EUT

THIS DOCUMENT WAS REDACTED WITH THE PRODUCTIP REDACTION TOOL ON 2018-08-13. AT THE TIME OF GENERATING THE DOCUMENT THE ORIGINAL DOCUMENT WAS AVAILABLE ALSO. THE ORIGINAL CAN ONLY BE MADE AVAILABLE BY THE DOCUMENT OWNER.

Photo 7 Internal of EUT

Photo 8 Internal of EUT

THIS DOCUMENT WAS REDACTED WITH THE PRODUCTIP REDACTION TOOL ON 2018-08-13. AT THE TIME OF GENERATING THE DOCUMENT THE ORIGINAL DOCUMENT WAS AVAILABLE ALSO. THE ORIGINAL CAN ONLY BE MADE AVAILABLE BY THE DOCUMENT OWNER.

Photo 9 Internal of EUT

Photo 10 Appearance of PCB

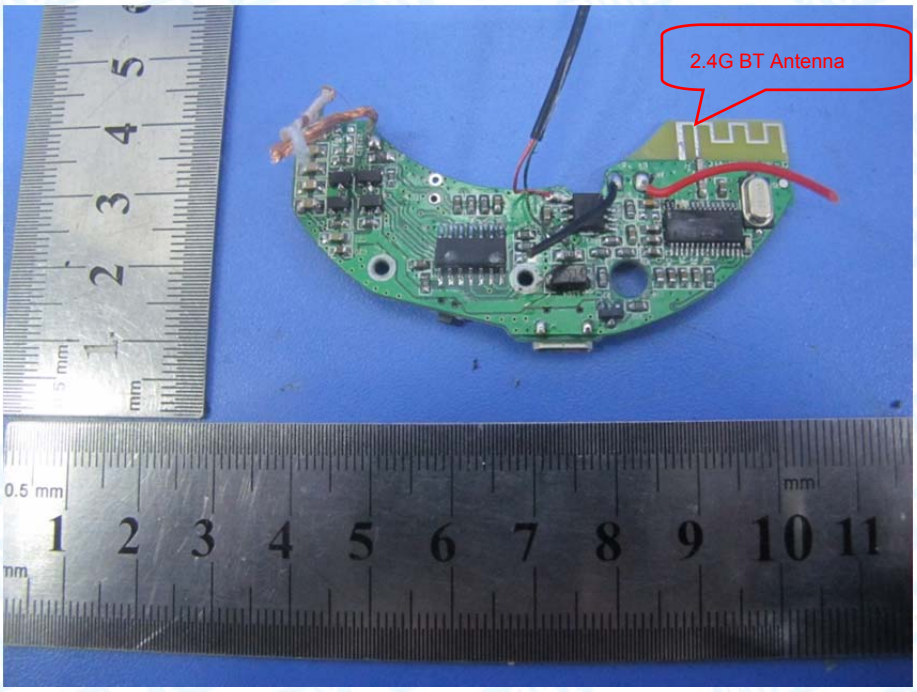

THIS DOCUMENT WAS REDACTED WITH THE PRODUCTIP REDACTION TOOL ON 2018-08-13. AT THE TIME OF GENERATING THE DOCUMENT THE ORIGINAL DOCUMENT WAS AVAILABLE ALSO. THE ORIGINAL CAN ONLY BE MADE AVAILABLE BY THE DOCUMENT OWNER.

Photo 11 Appearance of PCB

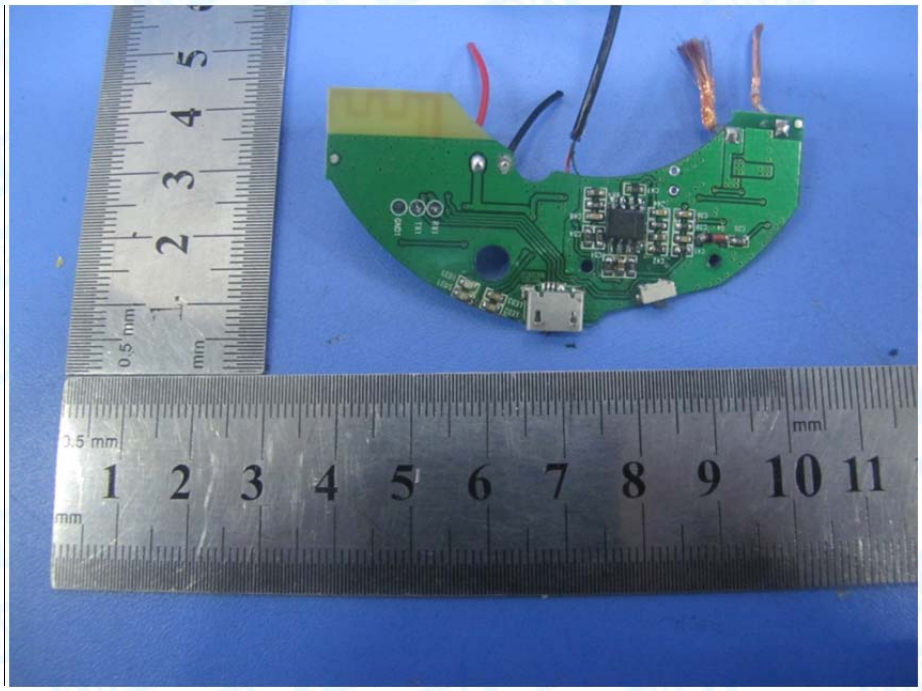

THIS DOCUMENT WAS REDACTED WITH THE PRODUCTIP REDACTION TOOL ON 2018-08-13. AT THE TIME OF GENERATING THE DOCUMENT THE ORIGINAL DOCUMENT WAS AVAILABLE ALSO. THE ORIGINAL CAN ONLY BE MADE AVAILABLE BY THE DOCUMENT OWNER.

16Photographs –Test Setup

Conducted Emission Test Setup

Radiation Test Setup

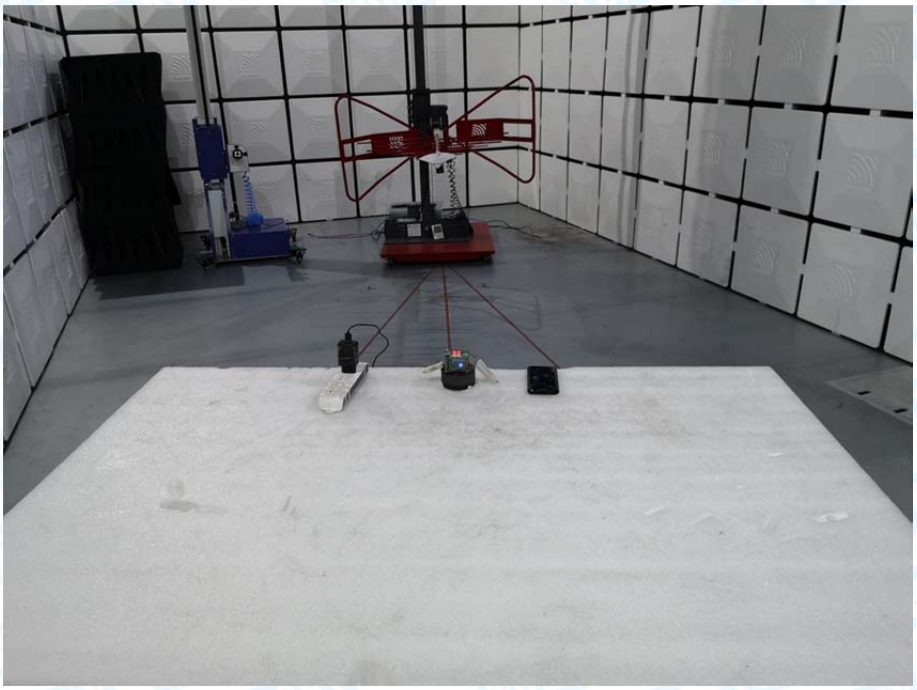

THIS DOCUMENT WAS REDACTED WITH THE PRODUCTIP REDACTION TOOL ON 2018-08-13. AT THE TIME OF GENERATING THE DOCUMENT THE ORIGINAL DOCUMENT WAS AVAILABLE ALSO. THE ORIGINAL CAN ONLY BE MADE AVAILABLE BY THE DOCUMENT OWNER.

Injection Current Test Setup

Electrostatic Discharge Test Setup

THIS DOCUMENT WAS REDACTED WITH THE PRODUCTIP REDACTION TOOL ON 2018-08-13. AT THE TIME OF GENERATING THE DOCUMENT THE ORIGINAL DOCUMENT WAS AVAILABLE ALSO. THE ORIGINAL CAN ONLY BE MADE AVAILABLE BY THE DOCUMENT OWNER.

EFT, Surge, Voltage Dips Test Setup

THIS DOCUMENT WAS REDACTED WITH THE PRODUCTIP REDACTION TOOL ON 2018-08-13. AT THE TIME OF GENERATING THE DOCUMENT THE ORIGINAL DOCUMENT WAS AVAILABLE ALSO. THE ORIGINAL CAN ONLY BE MADE AVAILABLE BY THE DOCUMENT OWNER.

THIS DOCUMENT WAS REDACTED WITH THE PRODUCTIP REDACTION TOOL ON 2018-08-13. AT THE TIME OF GENERATING THE DOCUMENT THE ORIGINAL DOCUMENT WAS AVAILABLE ALSO. THE ORIGINAL CAN ONLY BE MADE AVAILABLE BY THE DOCUMENT OWNER.

Attachment A--Conducted Emission Data

Temperature:	25 ℃	**Relative Humidity:**	55%
Pressure:	1010 hPa		
Test Voltage:	AC 230V/50Hz		
Terminal:	Line		
Test Mode:	Mode 1		
Remark:	N/A		

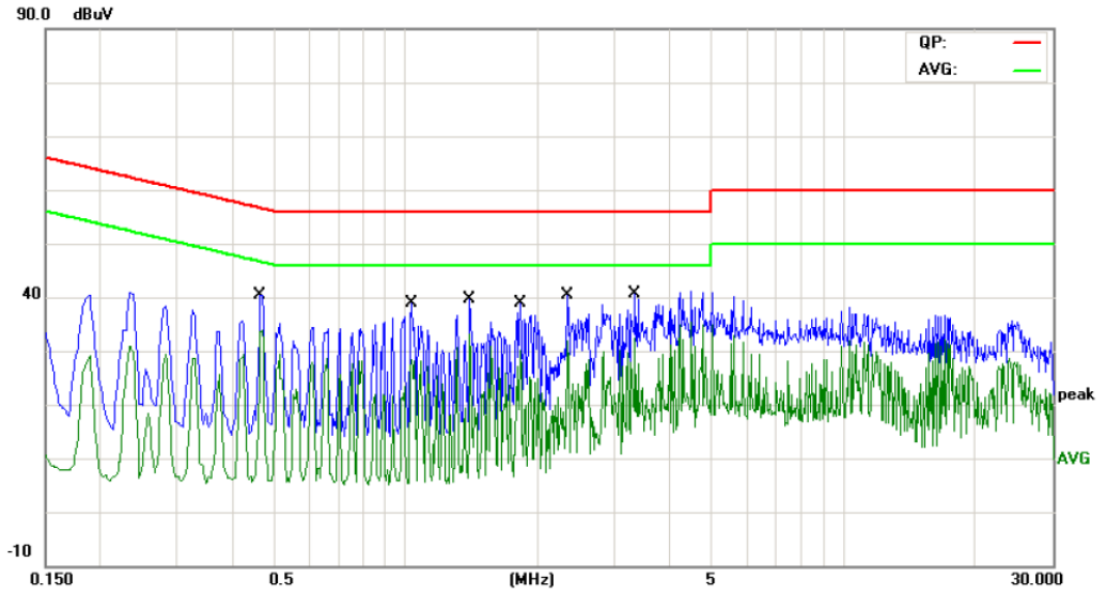

No.	Mk.	Freq.	Reading Level	Correct Factor	Measure-ment	Limit	Over	
		MHz	dBuV	dB	dBuV	dBuV	dB	Detector
1		0.4660	28.40	9.60	38.00	56.58	-18.58	QP
2	*	0.4660	23.18	9.60	32.78	46.58	-13.80	AVG
3		1.0300	24.16	9.60	33.76	56.00	-22.24	QP
4		1.0300	16.76	9.60	26.36	46.00	-19.64	AVG
5		1.4020	24.97	9.60	34.57	56.00	-21.43	QP
6		1.4020	20.05	9.60	29.65	46.00	-16.35	AVG
7		1.8260	21.32	9.61	30.93	56.00	-25.07	QP
8		1.8260	9.21	9.61	18.82	46.00	-27.18	AVG
9		2.3380	26.29	9.62	35.91	56.00	-20.09	QP
10		2.3380	21.39	9.62	31.01	46.00	-14.99	AVG
11		3.3380	22.39	9.66	32.05	56.00	-23.95	QP
12		3.3380	14.35	9.66	24.01	46.00	-21.99	AVG

Emission Level= Read Level+ Correct Factor

THIS DOCUMENT WAS REDACTED WITH THE PRODUCTIP REDACTION TOOL ON 2018-08-13. AT THE TIME OF GENERATING THE DOCUMENT THE ORIGINAL DOCUMENT WAS AVAILABLE ALSO. THE ORIGINAL CAN ONLY BE MADE AVAILABLE BY THE DOCUMENT OWNER.

Temperature:	25 ℃	**Relative Humidity:**	55%
Pressure:	1010 hPa		
Test Voltage:	AC 230V/50Hz		
Terminal:	Neutral		
Test Mode:	Mode 1		
Remark:	N/A		

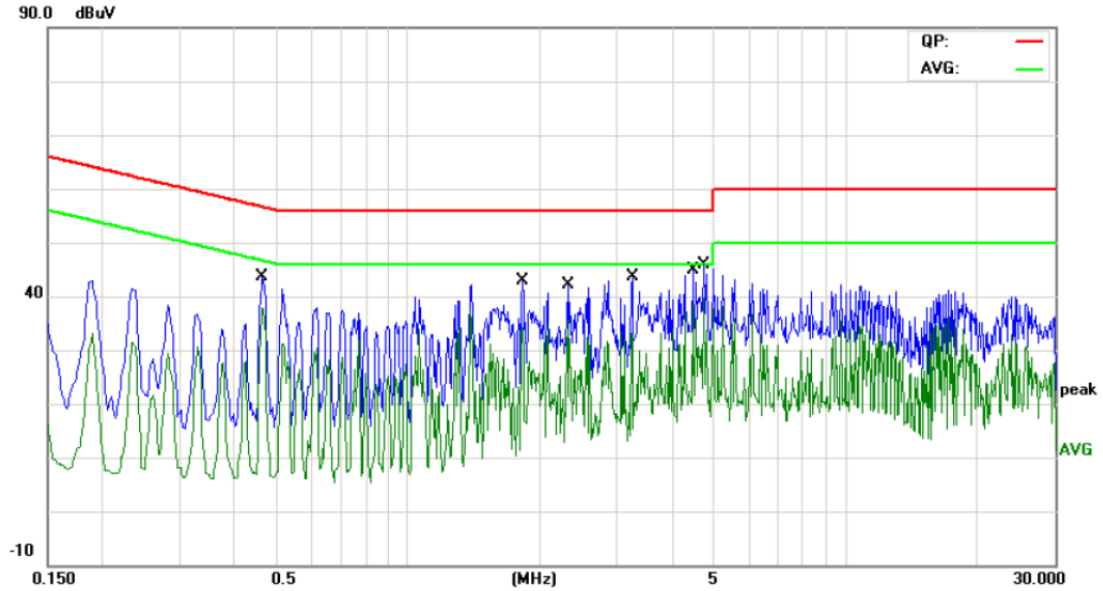

No.	Mk.	Freq.	Reading Level	Correct Factor	Measure-ment	Limit	Over	
		MHz	dBuV	dB	dBuV	dBuV	dB	Detector
1		0.4660	32.49	9.58	42.07	56.58	-14.51	QP
2	*	0.4660	27.73	9.58	37.31	46.58	-9.27	AVG
3		1.8260	30.45	9.61	40.06	56.00	-15.94	QP
4		1.8260	21.26	9.61	30.87	46.00	-15.13	AVG
5		2.3140	23.60	9.63	33.23	56.00	-22.77	QP
6		2.3140	11.30	9.63	20.93	46.00	-25.07	AVG
7		3.2420	16.92	9.68	26.60	56.00	-29.40	QP
8		3.2420	5.83	9.68	15.51	46.00	-30.49	AVG
9		4.4699	19.06	9.81	28.87	56.00	-27.13	QP
10		4.4699	10.14	9.81	19.95	46.00	-26.05	AVG
11		4.7260	22.20	9.86	32.06	56.00	-23.94	QP
12		4.7260	11.89	9.86	21.75	46.00	-24.25	AVG

Emission Level= Read Level+ Correct Factor

THIS DOCUMENT WAS REDACTED WITH THE PRODUCTIP REDACTION TOOL ON 2018-08-13. AT THE TIME OF GENERATING THE DOCUMENT THE ORIGINAL DOCUMENT WAS AVAILABLE ALSO. THE ORIGINAL CAN ONLY BE MADE AVAILABLE BY THE DOCUMENT OWNER.

THIS DOCUMENT WAS REDACTED WITH THE PRODUCTIP REDACTION TOOL ON 2018-08-13. AT THE TIME OF GENERATING THE DOCUMENT THE ORIGINAL DOCUMENT WAS AVAILABLE ALSO. THE ORIGINAL CAN ONLY BE MADE AVAILABLE BY THE DOCUMENT OWNER.

Attachment B--Radiated EmissionTest Data

-----Below 1G

Temperature:	25 ℃	**Relative Humidity:**	55%
Pressure:	1010 hPa		
Test Voltage:	DC 5V		
Ant. Pol.	Horizontal		
Test Mode:	Mode 1		
Remark:	Only the worst case is reported		

No.	Mk.	Freq.	Reading Level	Correct Factor	Measure-ment	Limit	Over	
		MHz	dBuV	dB/m	dBuV/m	dBuV/m	dB	Detector
1		32.1795	37.96	-14.64	23.32	40.00	-16.68	peak
2		55.2207	47.08	-23.83	23.25	40.00	-16.75	peak
3		134.5592	49.76	-22.46	27.30	40.00	-12.70	peak
4		173.2051	48.20	-20.40	27.80	40.00	-12.20	peak
5	*	191.0738	51.06	-19.82	31.24	40.00	-8.76	peak
6		323.3204	47.66	-15.45	32.21	47.00	-14.79	peak

Emission Level= Read Level+ Correct Factor

Temperature:	25 ℃	**Relative Humidity:**	55%
Pressure:	1010 hPa		
Test Voltage:	DC 5V		
Ant. Pol.	Vertical		
Test Mode:	Mode 1		
Remark:	Only the worst case is reported		

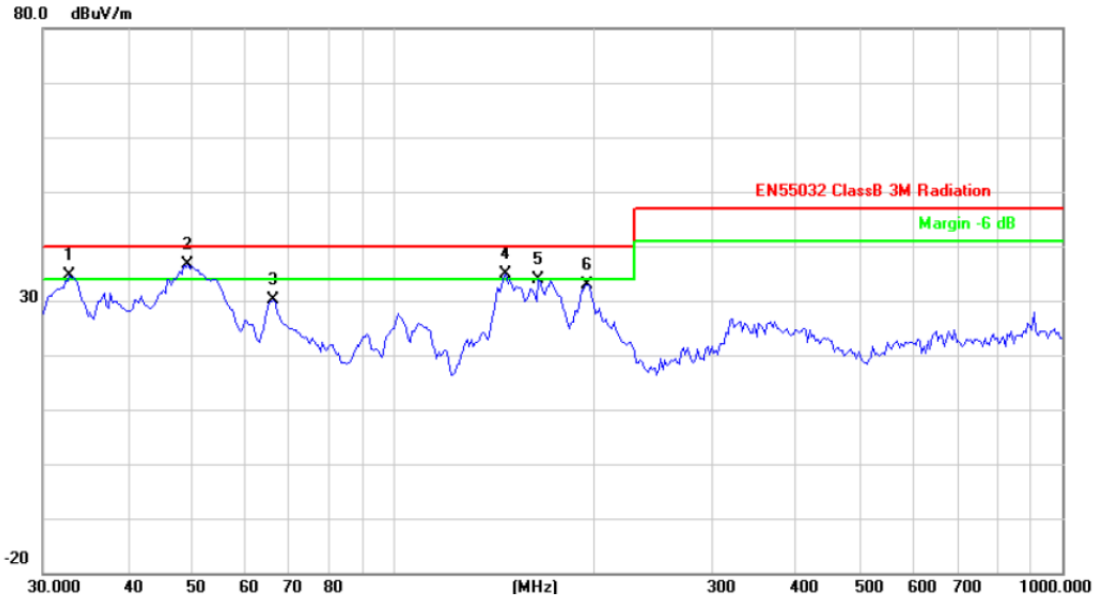

No.	Mk.	Freq.	Reading Level	Correct Factor	Measure-ment	Limit	Over	
		MHz	dBuV	dB/m	dBuV/m	dBuV/m	dB	Detector
1	!	32.8637	49.86	-15.16	34.70	40.00	-5.30	peak
2	*	49.3594	59.56	-23.02	36.54	40.00	-3.46	peak
3		66.2662	53.91	-23.83	30.08	40.00	-9.92	peak
4	!	147.4036	56.70	-21.71	34.99	40.00	-5.01	peak
5		164.9075	54.61	-20.70	33.91	40.00	-6.09	peak
6		195.1365	52.73	-19.88	32.85	40.00	-7.15	peak

Emission Level= Read Level+ Correct Factor

THIS DOCUMENT WAS REDACTED WITH THE PRODUCTIP REDACTION TOOL ON 2018-08-13. AT THE TIME OF GENERATING THE DOCUMENT THE ORIGINAL DOCUMENT WAS AVAILABLE ALSO. THE ORIGINAL CAN ONLY BE MADE AVAILABLE BY THE DOCUMENT OWNER.

THIS DOCUMENT WAS REDACTED WITH THE PRODUCTIP REDACTION TOOL ON 2018-08-13. AT THE TIME OF GENERATING THE DOCUMENT THE ORIGINAL DOCUMENT WAS AVAILABLE ALSO. THE ORIGINAL CAN ONLY BE MADE AVAILABLE BY THE DOCUMENT OWNER.

-----Above 1G

Temperature:	25 ℃	**Relative Humidity:**	55%
Pressure:	1010 hPa		
Test Voltage:	DC 5V		
Ant. Pol.	Horizontal		
Test Mode:	Mode 1		
Remark:	No report for the emission which more than 10 dB below the prescribed limit.		

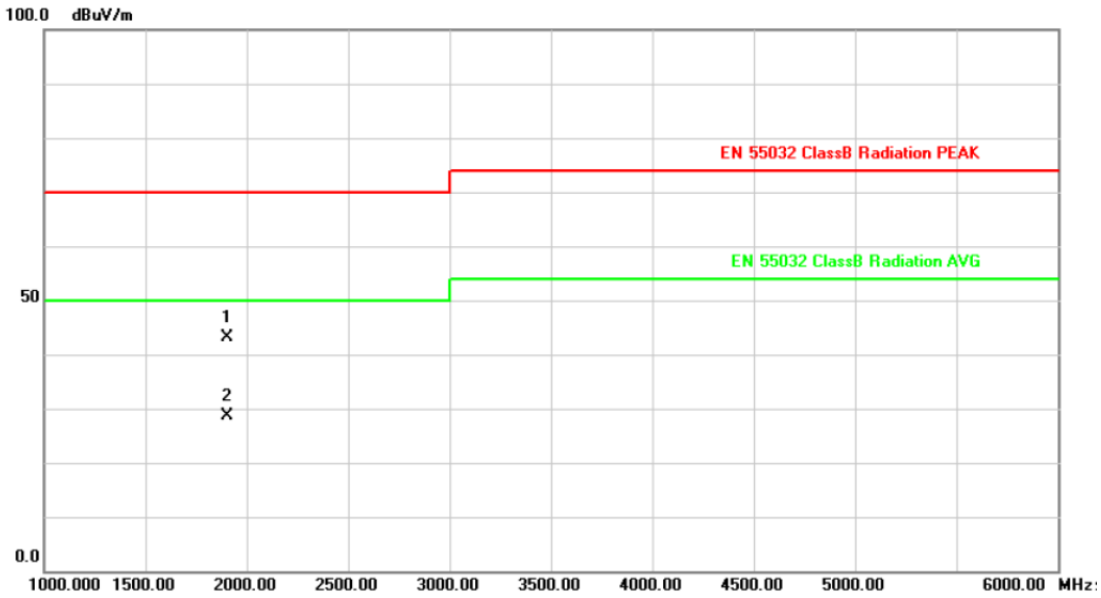

No.	Mk.	Freq.	Reading Level	Correct Factor	Measure-ment	Limit	Over	
		MHz	dBuV	dB/m	dBuV/m	dBuV/m	dB	Detector
1		1906.051	45.53	-2.43	43.10	70.00	-26.90	peak
2	*	1906.051	30.96	-2.43	28.53	50.00	-21.47	AVG

Emission Level= Read Level+ Correct Factor

THIS DOCUMENT WAS REDACTED WITH THE PRODUCTIP REDACTION TOOL ON 2018-08-13. AT THE TIME OF GENERATING THE DOCUMENT THE ORIGINAL DOCUMENT WAS AVAILABLE ALSO. THE ORIGINAL CAN ONLY BE MADE AVAILABLE BY THE DOCUMENT OWNER.

Temperature:	25 ℃	**Relative Humidity:**	55%
Pressure:	1010 hPa		
Test Voltage:	DC 5V		
Ant. Pol.	Vertical		
Test Mode:	Mode 1		
Remark:	No report for the emission which more than 10 dB below the prescribed limit.		

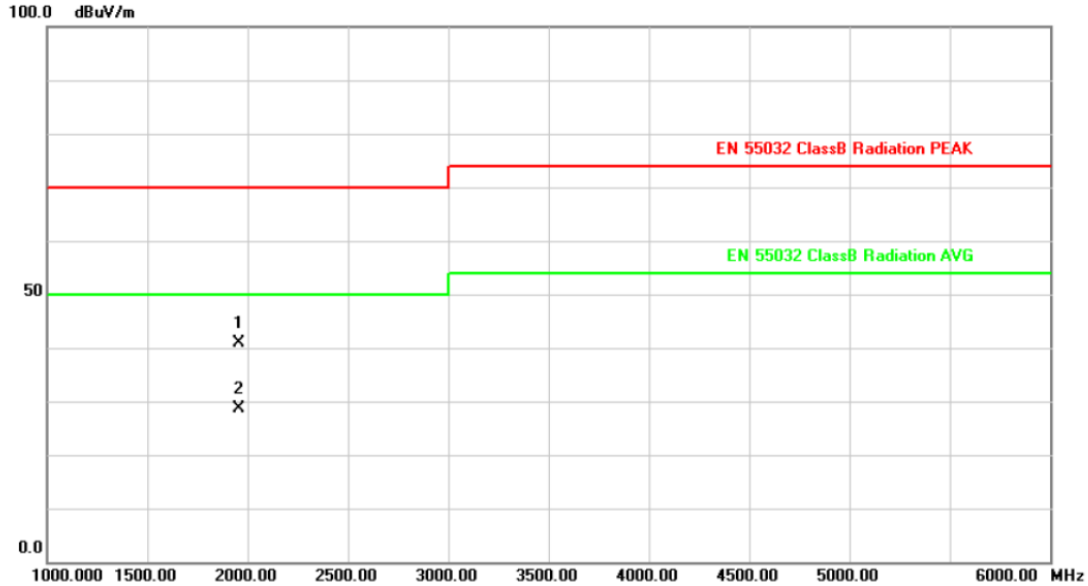

No.	Mk.	Freq.	Reading Level	Correct Factor	Measure-ment	Limit	Over	
		MHz	dBuV	dB/m	dBuV/m	dBuV/m	dB	Detector
1		1954.468	42.68	-1.92	40.76	70.00	-29.24	peak
2	*	1954.468	30.60	-1.92	28.68	50.00	-21.32	AVG

Emission Level= Read Level+ Correct Factor

THIS DOCUMENT WAS REDACTED WITH THE PRODUCTIP REDACTION TOOL ON 2018-08-13. AT THE TIME OF GENERATING THE DOCUMENT THE ORIGINAL DOCUMENT WAS AVAILABLE ALSO. THE ORIGINAL CAN ONLY BE MADE AVAILABLE BY THE DOCUMENT OWNER.

Attachment C--Electrostatic Discharge Test Data

Temperature:	24℃	Humidity :	50%
PowerSupply:	DC 5V	Test Mode :	Mode 1
Test Engineer :	Jason		

Air Discharge:±2kV/±4kV/±8kV Contact Discharge:±2kV/±4kV
For each point positive 10 times and negative 10 times discharge.

Location	Test Level (kV)	No. of Discharge	Result
A1	±2kV ±4kV ±8kV	20	A
A2		20	A
A3		20	A
A4		20	A
/	±2kV ±4kV	/	/
/		/	/
/		/	/
/		/	/
HCP	±4kV	40	A
VCP	±4kV	40	A

Note: "/" Representative the test not applicable.

Test Location Photos

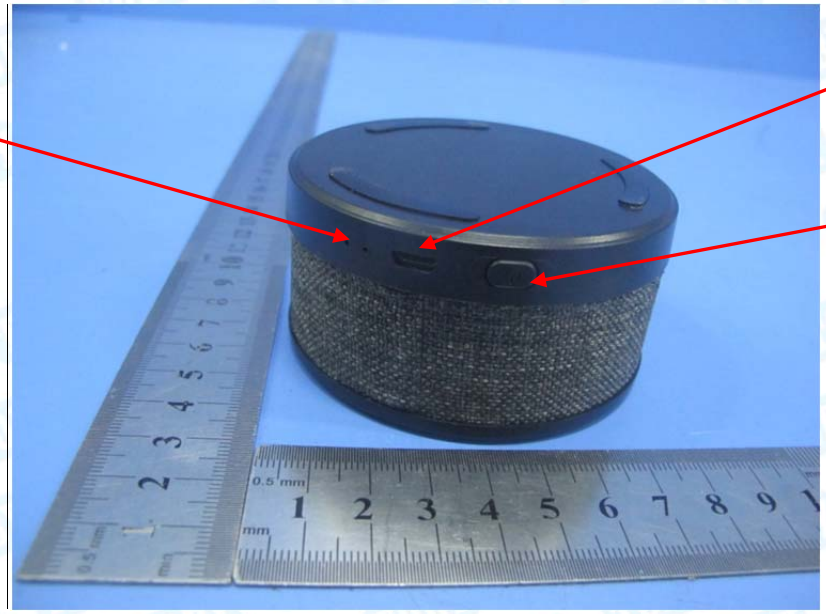

Note:
Criteria A: There was no change operated with initial operating during the test.
Criteria B: The EUT function loss during the test, but self-recoverable after the test.
Criteria C: The system shut down during the test.

THIS DOCUMENT WAS REDACTED WITH THE PRODUCTIP REDACTION TOOL ON 2018-08-13. AT THE TIME OF GENERATING THE DOCUMENT THE ORIGINAL DOCUMENT WAS AVAILABLE ALSO. THE ORIGINAL CAN ONLY BE MADE AVAILABLE BY THE DOCUMENT OWNER.

Attachment D--RF Field Strength Susceptibility Test Data

Temperature : 25℃ Humidity : 50%

Powersupply : AC 230V/50Hz Test Mode : Mode 1

Required Performance Criteria: A

Modulation: AM 80%

Pulse: 1 kHz

EUT Position	Actual Performance Criteria				Judgment
	FrequencyRange 1: 80~1000MHz		FrequencyRange2: 1000~6000MHz		
	Horizontal	Vertical	Horizontal	Vertical	
Front	A	A	A	A	PASS
Right	A	A	A	A	PASS
Rear	A	A	A	A	PASS
Left	A	A	A	A	PASS

Note:
Criteria A: There was no change operated with initial operating during the test.
Criteria B: The EUT function loss during the test, but self-recoverable after the test.
Criteria C: The system shut down during the test.

THIS DOCUMENT WAS REDACTED WITH THE PRODUCTIP REDACTION TOOL ON 2018-08-13. AT THE TIME OF GENERATING THE DOCUMENT THE ORIGINAL DOCUMENT WAS AVAILABLE ALSO. THE ORIGINAL CAN ONLY BE MADE AVAILABLE BY THE DOCUMENT OWNER.

THIS DOCUMENT WAS REDACTED WITH THE PRODUCTIP REDACTION TOOL ON 2018-08-13. AT THE TIME OF GENERATING THE DOCUMENT THE ORIGINAL DOCUMENT WAS AVAILABLE ALSO. THE ORIGINAL CAN ONLY BE MADE AVAILABLE BY THE DOCUMENT OWNER.

Attachment E--Electrical Fast Transient/Burst Test Data

Temperature : 25℃ Humidity : 50%

Power supply : AC 230V/50Hz Test Mode : Mode 1

Required Performance Criteria: B

Line : ☒ AC Mains Coupling : ☒ Direct

Line : ☐ Signal ☐ I/O Cable Coupling : ☐ Capacitive

Line		Voltage(kV)	Required Performance Criteria		Actual Performance Criteria		Judgment
			(+)	(-)	(+)	(-)	
AC LINE	L	1.0	B	B	A	A	PASS
	N	1.0	B	B	A	A	PASS
	L-N	1.0	B	B	A	A	PASS
	L-PE	1.0	/	/	/	/	/
	N-PE	1.0	/	/	/	/	/
	L-N-PE	1.0	/	/	/	/	/
DC LINE		/	/	/	/	/	/
Signal Line		/	/	/	/	/	/

Remark:

Criteria A: There was no change operated with initial operating during the test.
Criteria B: The EUT function loss during the test, but self-recoverable after the test.
Criteria C: The system shut down during the test.

THIS DOCUMENT WAS REDACTED WITH THE PRODUCTIP REDACTION TOOL ON 2018-08-13. AT THE TIME OF GENERATING THE DOCUMENT THE ORIGINAL DOCUMENT WAS AVAILABLE ALSO. THE ORIGINAL CAN ONLY BE MADE AVAILABLE BY THE DOCUMENT OWNER.

Attachment F--Surge Immunity Test Data

Temperature : 24℃ Humidity : 50%

Power supply : AC 230V/50Hz Test Mode : Mode 1

Required Performance Criteria: B

Injected Line	Voltage (kV)	Phase	Actual Performance Criteria		Result	
			(+)	(-)	(+)	(-)
L, N, L-N	1.0	0°	A	A	PASS	PASS
		90°	A	A	PASS	PASS
		180°	A	A	PASS	PASS
		270°	A	A	PASS	PASS
L/N-PE	2.0	0°	/	/	/	/
		90°	/	/	/	/
		180°	/	/	/	/
		270°	/	/	/	/
L-N-PE	2.0	0°	/	/	/	/
		90°	/	/	/	/
		180°	/	/	/	/
		270°	/	/	/	/
Signal Line	1.0	+/-	/	/	/	/

Remark:
Criteria A: There was no change operated with initial operating during the test.
Criteria B: The EUT function loss during the test, but self-recoverable after the test.
Criteria C: The system shut down during the test.

THIS DOCUMENT WAS REDACTED WITH THE PRODUCTIP REDACTION TOOL ON 2018-08-13. AT THE TIME OF GENERATING THE DOCUMENT THE ORIGINAL DOCUMENT WAS AVAILABLE ALSO. THE ORIGINAL CAN ONLY BE MADE AVAILABLE BY THE DOCUMENT OWNER.

Attachment G--Conducted Immunity Test Data

Temperature	: 24℃	Humidity	: 50%
Power supply	: AC 230V/50Hz	Test Mode	: Mode 1

Required Performance Criteria: **A**

Frequency Range (MHz)	Injected Position	Voltage Level (e.m.f.)	Required Performance Criteria	Actual Performance Criteria	Result
0.15 ~ 80	AC Mains	3V(rms), AM 80% Modulated with 1 kHz	**A**	A	**PASS**
0.15 ~ 80	DC Mains	3V(rms), AM 80% Modulated with 1 kHz	**A**	/	/
0.15 ~ 80	Signal Line	3V(rms), AM 80% Modulated with 1 kHz	**A**	/	/

Remark:
Criteria A: There was no change operated with initial operating during the test.
Criteria B: The EUT function loss during the test, but self-recoverable after the test.
Criteria C: The system shut down during the test.

THIS DOCUMENT WAS REDACTED WITH THE PRODUCTIP REDACTION TOOL ON 2018-08-13. AT THE TIME OF GENERATING THE DOCUMENT THE ORIGINAL DOCUMENT WAS AVAILABLE ALSO. THE ORIGINAL CAN ONLY BE MADE AVAILABLE BY THE DOCUMENT OWNER.

Attachment H--Voltage Dips and Interruptions Test Data

Temperature :	25℃	Humidity :	50 %
Power Supply :	AC 230V/50Hz	Test Mode :	Mode 1

Required Performance Criteria: **B&C**

Test Results Description

Voltage Reduction	Cycles	Perform Criteria	Results	Judgment
Voltage dip 100%	0.5	**B**	A	**PASS**
Voltage dip 100%	1	**B**	A	**PASS**
Voltage dip 30%	25	**C**	C	**PASS**
Voltage Interruption100%	250	**C**	C	**PASS**

Remark**:**
Criteria A: There was no change operated with initial operating during the test.
Criteria B: The EUT function loss during the test, but self-recoverable after the test.
Criteria C: The system shut down during the test.

-----END OF REPORT-----